Catalog #57

2016

Banjo Liquid Handling Products

BANJO®
Liquid Handling Products

Catalog #57 Effective Sept. 28, 2015
Agricultural and Industrial Applications

2016 NEW

2" FULL PORT POLY DRY-MATES®

FEATURES

- Lightweight.
- Unrestricted 2" flow.
- Minimal fluid spillage.
- Easy to use.
- Economical.
- Reduces risk of exposure.
- Wide range of chemical resistance.
- Cannot be uncoupled in open position.
- Spillage Data: 2" = 3 ml
- Maximum operating pressure 150 P.S.I. @ 70°F or 70 P.S.I. @ 150°F.

DM220AD

Female Dry-Mate
DM220D

Male Dry-Mate
DM220A

POLY DRY-MATE						
PART NO	DESCRIPTION	MAX PSI	PIPE SIZE	OPENING THRU BALL	QTY	PRICE EA
DM220AD	2" Full Port Dry-Mate Set	100	2"	2"	1	
DM220A	2" Male x FPT NPT	100	2"	2"	1	
DM220D	2" Female x FPT NPT	100	2"	2"	1	

***Manifold* version coming soon!**
Please check our website periodically for updates.

PUSH LOCK MICRO VALVES

FEATURES

- 90° rotating handle.
- Precision molded polypropylene is reinforced with fiberglass for additional strength.
- Standard FKM (viton type) seats and O-rings.
- Maximum operating pressure 150 P.S.I.

POLY MICRO VALVES						
PART NO	DESCRIPTION	MAX PSI	THREAD SIZE	OPENING THRU BALL	QTY	PRICE EA
LVPL025V	¼" Female NPT Micro Valve	150	¼"	3/8"	1	
LVPL038V	3/8" Female NPT Micro Valve	150	3/8"	3/8"	1	
LVPL050V	½" Female NPT Micro Valve	150	½"	15/32"	1	

John Guest® Fitting

The brand "**John Guest**" is a registered trademark of John Guest International Limited.

BANJO®

PRODUCTS

LEV SERIES ELECTRIC PUSH LOCK VALVES

FEATURES

- 12 Volt DC
- Stationary current draw: less than 0.04 amps.
- Rotating current draw: less than 0.40 amps.
- Stall current: 0.75 amps
- Response time: 1/3 sec open to close
- TFM seats
- EPDM seals
- Fiberglass reinforced polypropylene.
- Integrated mounting slot
- Standard 3 wire configuration.
- Max Pressure = 150 PSI @ 70 °F.

John Guest® Fitting

The brand "**John Guest**" is a registered trademark of John Guest International Limited.

Please see our regular LEV's Series electric valves on pages 30 & 48.

LEV SERIES ELECTRIC PUSH LOCK VALVES						
PART NO	DESCRIPTION	MAX PSI	PIPE SIZE	OPENING THRU BALL	QTY	PRICE EA
LEV025PL	¼" Electric Valve	150	¼"	3/8"	1	
LEV038PL	3/8" Full Port Electric Valve	150	3/8"	3/8"	1	
LEV050PL	½" Electric Valve	150	½"	15/32"	1	

LEV SERIES ELECTRIC PUSH LOCK VALVES						
PART NO	DESCRIPTION	MAX PSI	PIPE SIZE	OPENING THRU BALL	QTY	PRICE EA
LEV025PLST	¼" Electric Valve	150	¼"	3/8"	1	
LEV038PLST	3/8" Full Port Electric Valve	150	3/8"	3/8"	1	

SUPPORT AND WARRANTY INFORMATION

LIQUID HANDLING PRODUCTS

Located in the United States, Banjo Corporation is a leading manufacturer of Liquid Handling Products that service Agricultural and Industrial Applications. Specializing in injected molded, glass-reinforced polypropylene products, Banjo prides itself on innovative design, skillful engineering, precise manufacturing, and finding the solution that works best for your liquid handling needs. Banjo Liquid Handling Products are marketed and sold all over the world. Products available from Banjo include: Valves, Electric Valves, Manifold Systems, Dry-Disconnects, IBC/ Tank Accessories, Cam Lever Couplings, Pipe Fittings, Line Strainers, and Pumps.

APPLICATIONS FOR BANJO POLYPROPYLENE LIQUID HANDLING PRODUCTS

- Agricultural Fertilizers, Herbicides, Pesticides, Insecticides
- Pulp & Paper
- Inks, Paints, Coatings
- Textiles
- Alkalis, Acids, Solvents, Corrosives
- Tank Trucks, Rotomolded Tanks, IBC's
- Organic & Inorganic Chemicals
- Reverse Osmosis
- Adhesives, Lubricants, Resins
- Plating
- Water Treatment, Wastewater
- Industrial Chemicals
- Deionized Water
- Soaps & Detergents
- Circuit Board Chemistry
- Pharmaceuticals

HOW TO ORDER

Contact your local Banjo Distributor or Banjo Corporation:
Banjo Corporation
150 Banjo Drive
Crawfordsville, Indiana 47933 USA
Telephone: (765) 362-7367
Fax: (800) 458-0232 International Fax: (765) 362-0744

E-Mail Technical Questions: banjosales@idexcorp.com
E-Mail Orders: banjoorders@idexcorp.com
E-Mail Latin America Sales: BanjoSalesLatinAmerica@idexcorp.com
E-Mail Europe Sales: BanjoSalesEurope@idexcorp.com
Website: www.banjocorp.com

MINIMUM ORDER, BAG QUANTITIES AND DROP SHIPMENTS

Banjo Corporation requires a $50.00 net minimum order. Use Banjo Part Numbers when ordering. Items are listed in this catalog as item, bag or box quantities. **To ehance delivery and ensure accuracy, Banjo requires orders in full bag quantities.** For items sold in boxes, Banjo encourages orders in full box quantities to facilitate production and delivery. Orders requiring a drop shipment will incur an additional 10% surcharge on the total value of the order prior to tax and shipping fees.

PRICING

The prices listed are suggested retail prices only. Please contact your local distributor for your every-day market price. Pricing is subject to change without notice. All prices are per item, not per bag or box quantity.

CONDITIONS OF SALE – TERMS AND DELIVERY

Subject to credit approval, payment terms will be 1% 15, net 30. Without credit approval, payment must be made when order is placed. Delivery is FCA (Incoterms 2010) Banjo factory, Crawfordsville, Indiana, unless specifically stated otherwise in writing by Banjo. All orders will be shipped freight collect except orders shipped U.P.S. On U.P.S. shipments, the actual freight charges will be prepaid and added to the invoice.

All Orders are subject to Banjo Corporation Terms and Conditions of Sale which are available at http://banjocorp.com/support-information and can also be obtained by calling 765-362-7367.

QUALITY

Banjo Corporation is dedicated to providing quality products that satisfy our customers' needs. Banjo focuses is on continuous improvement and innovation.

TECHNICAL SUPPORT SERVICES

Banjo Corporation has technical service personnel who are always ready to assist you with your questions about Banjo Liquid Handling Products and your specific application. We are committed to being your resource for quality products and efficient technical service. However, the ultimate responsibility for determining the fitness and suitability of products for the purposes and applications for which they are used rests with the user.

PRODUCT CHANGES

Banjo Corporation reserves the right to change products and product specifications at any time.

WARRANTY

Subject to the Performance Specifications and the Warranty Exceptions and Exclusions statements below:

- Banjo warrants that Banjo products in the form supplied by Banjo will be free of defects in material and workmanship for a period of 12 months from the date of invoice.

- THE ABOVE WARRANTY IS THE SOLE AND EXCLUSIVE WARRANTY MADE BY BANJO. NO OTHER EXPRESS OR IMPLIED WARRANTY OF ANY KIND, ORAL OR WRITTEN, INCLUDING ANY IMPLIED WARRANTY OF MERCHANTABILITY OR FITNESS FOR A PARTICULAR PURPOSE, IS MADE WITH PURPOSE, IS MADE WITH RESPECT TO THE QUALITY, WORKMANSHIP, MATERIALS, DESIGN, PERFORMANCE, FITNESS OR SUITABILITY OF ANY BANJO OR OTHER PRODUCT.

- If a warranty claim is approved by Banjo, Banjo will either replace or repair the non-conforming Banjo product free of charge or, at Banjo's sole discretion, refund or credit to Customer the purchase price Banjo received for such non-conforming Banjo product. Such replacement, repair, refund or credit will be Banjo's sole liability and obligation and Customer's sole remedy with respect to any nonconforming or defective Banjo product. All Banjo products that are replaced shall be the property of Banjo. Customer shall be responsible for all freight charges in connection with any replacement or repair. Free replacement products and repair parts will not be provided prior to approval of a warranty claim.

- The Banjo Part No., Banjo Serial No. (if any), invoice number, and date of purchase of the Banjo product claimed to be defective are required for all warranty claims. In addition, if requested by Banjo, a Banjo product that is the subject of a warranty claim must be returned to Banjo, and

Banjo may require Customer to provide records and information to enable Banjo to determine the root cause of the issue with a Banjo product that is claimed to be defective.

- Banjo products are products manufactured by Banjo. Products of other manufacturers that Banjo may sell, including, but not limited to, engines, hydraulic motors and electric motors, are not Banjo products and are not covered by the above warranty.

Performance Specifications: Performance specifications for Banjo products are determined under controlled laboratory conditions and according to specific test requirements. The results of these tests are not intended to define the performance of any Banjo product under actual conditions or specific applications. Banjo does not warrant the fitness or suitability of any Banjo or other product for any purpose or application, and Customer will have sole responsibility and liability for determining the fitness and suitability of all Banjo and other products sold by Banjo for the purposes and applications for which they are used, including the ability of products to satisfy applicable health, safety and environmental standards and requirements, compatibility of products with chemicals and other substances, and compatibility of products with conditions of actual use, including pressures and temperatures. Field testing by Customer under conditions of actual use is recommended prior to using a product for a particular purpose or application.

Warranty Exceptions and Exclusions: Notwithstanding anything to the contrary:

- Banjo products that are quoted as being sold “Without Warranty” are not warranted.
- Banjo products that are quoted with a warranty less than 12 months from the date of invoice are warranted only for the period specified in the quote.
- A warranty claim must be asserted during the applicable warranty period, and Banjo shall have no liability or obligation of any kind with respect to a Banjo product if a warranty claim is asserted after the expiration of the applicable warranty period for such Banjo product.
- Banjo shall have no liability or obligation of any kind with respect to a Banjo product if Banjo is not given the opportunity, after receiving a warranty claim with respect to such Banjo product, to examine such Banjo product at its Crawfordsville, Indiana, facility.
- Banjo shall have no liability or obligation of any kind with respect to a Banjo product if Customer makes any further use of such Banjo product after asserting a warranty claim with respect to such Banjo product.
- Banjo shall have no liability or obligation of any kind with respect to an issue with a Banjo product that is directly or indirectly attributable to normal wear, corrosion, neglect, misuse, alteration, modification, improper handling, improper storage, improper installation, improper maintenance, improper repair, failure to follow Banjo’s oral or written instructions, damage during or after shipment, any non-Banjo product with which such Banjo product is used, or use of such Banjo product for a purpose or application for which it is not fit or suitable.
- Banjo makes no warranty with respect to products of other manufacturers that Banjo may sell, including, but not limited to, engines, hydraulic motors and electric motors. Any warranty with respect to products of other manufacturers shall be limited to a pass through of the other manufacturer’s warranties to the extent permitted by the manufacturer.

CLAIMS & RETURNS

All returns must have an accompanying Return Goods Authorization number (RGA Number) regardless of reason for return. Please contact Banjo Corporation for an RGA number prior to returning goods to the above address.

Inspect all shipments for damage upon receipt. If any cartons are damaged, do not sign for or accept them without driver making a notation on the freight bill or receipt. After receiving the shipment, remove the goods and thoroughly inspect immediately. If any concealed damage is discovered, notify the delivering carrier at once in writing. Do not move damaged merchandise until further inspection has been made. Save carton and packing material for inspection. Do not order carrier to return merchandise to our factory without contacting Banjo.

Claims for shortages or inaccurate filling of orders must be made within 30 days after receipt of goods. Return shipments must be prepaid. C.O.D. or “Freight Collect” shipments will not be accepted. There will be a 30% restocking charge on any items returned for credit or exchange when the error is not ours. Goods must be in new and original condition without labels, stickers or markings, other than Banjo Corporation.

RETURN FOR REPAIR POLICY

1. Items returned for repair will not be accepted without prior approval and a return authorization number.
2. Defective warranty items will be replaced or repaired at manufacturer’s option on a no charge basis.
3. The customer will be charged for the appropriate parts and labor charges for all non-warranty work.
4. The manufacturer will not provide replacement parts at no charge while repairs are being made.
5. A description of the application (media, temperature, pressure) and performance of the items must accompany the return. Please specify type of failure and exact location of failure.
6. Prior to returning, items must be cleaned and neutralized. Items which have not been cleaned and neutralized will not be inspected or repaired.

PUMP RETURNS

Upon Receipt of Pumps:

1. Inspect pump for damage!
2. If a pump is damaged, do not sign for or accept damaged cartons without driver making a notation on freight bill or receipt.
3. Do not move damaged merchandise any further until inspection has been made. Save carton and packing material for inspection.
4. Do not order carrier to return merchandise to our factory without contacting Banjo Corporation.

When Returning Pumps:

1. Gasoline Engines must be empty of fuel!
2. Pumps must be cleaned and neutralized.
3. Pack pump in heavy-duty carton with sufficient packing to protect bottom and all sides.
4. Specify type of failure and exact location of failure.
5. A description of the application (media, temperature, pressure) and performance of the items must accompany the return.
6. The manufacturer will not provide free replacement parts or pumps while repairs are being made.
7. The customer will be charged for the appropriate parts and labor charges for all non-warranty work.
8. Defective pumps will be replaced or repaired at manufacturer’s option.
9. Banjo Corporation is not responsible for pump/engine damage resulting from accident, misuse or abuse, or lack of reasonable care.
10. No responsibility is assumed for labor, or any special, incidental or consequential damages.
11. Engine warranty service and engine parts/accessories available at authorized Honda and Briggs & Stratton Dealers.

INDEX

VALVES

p. 7

PINCH VALVES

p. 27

CHECK VALVES

p. 28/78

ELECTRIC VALVES

p. 29

MANIFOLD FLANGE CONNECTIONS

p. 46

PRESSURE RELIEF VALVES

p. 56

FLOW METERS

p. 76

BOOM NOZZLE PIPE ADAPTERS

p. 78

DRY-DISCONNECTS

p. 87

IBC/TANK ACCESSORIES

p. 102

CAM LEVER COUPLINGS

p. 114

GARDEN HOSE FITTINGS

p. 121

PIPE FITTINGS

p. 122

LINE STRAINERS

p. 128

PUMPS

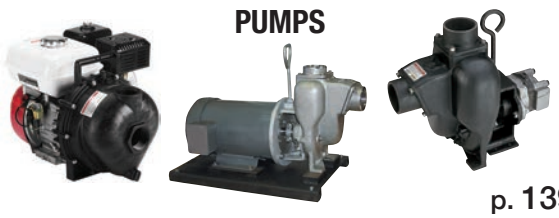

p. 139

Polypropylene Micro Valves

FEATURES

- 90° rotating handle.
- Precision molded polypropylene is reinforced with fiberglass for additional strength.
- Standard FKM (viton type) seats and O-rings.
- Maximum operating pressure 300 P.S.I.

LV050SLV

POLY MICRO VALVES						
PART NO	DESCRIPTION	MAX PSI	THREAD SIZE	OPENING THRU BALL	QTY	PRICE EA
LV025V	¼" Female NPT Micro Valve	300	¼"	⅜"	1	
LV038V	⅜" Female NPT Micro Valve	300	⅜"	⅜"	1	
LV050V	½" Female NPT Micro Valve	300	½"	15/32"	1	
LV050SLV	½" Side Load Micro Valve	300	½"	½"	1	

LV038MTV

LV038050MTV

LV050100MTV

POLY MICRO VALVES						
PART NO	DESCRIPTION	MAX PSI	THREAD SIZE	OPENING THRU BALL	QTY	PRICE EA
LV025MTV	¼" Female x Male NPT Micro Valve	300	¼"	⅜"	1	
LV038MTV	⅜" Female x Male NPT Micro Valve	300	⅜"	⅜"	1	
LV038050MTV	⅜" Female x ½" Male NPT Micro Valve	300	⅜"x½"	⅜"	1	
LV050MTV	½" Female x Male NPT Micro Valve	300	½"	15/32"	1	
LV050100MTV	½" Female x 1" Male NPT Micro Valve	300	½"	15/32"	1	

POLY MICRO VALVES						
PART NO	DESCRIPTION	MAX PSI	THREAD SIZE	OPENING THRU BALL	QTY	PRICE EA
LVHB025V	¼" Hose Barb Micro Valve	300	¼"	⅜"	1	
LVHB038V	⅜" Hose Barb Micro Valve	300	⅜"	⅜"	1	
LVHB050V	½" Hose Barb Micro Valve	300	½"	⅜"	1	
LVHB075V	¾" Hose Barb Micro Valve	300	¾"	15/32"	1	

LVHB038050MTV

LVHB075MTV

LVHB075100MTV

POLY MICRO VALVES						
PART NO	DESCRIPTION	MAX PSI	THREAD SIZE	OPENING THRU BALL	QTY	PRICE EA
LVHB038050MTV	⅜" Hose Barb x ½" Male NPT Micro Valve	300	½"	⅜"	1	
LVHB075MTV	¾" Hose Barb x ¾" Male NPT Micro Valve	300	¾"	½"	1	
LVHB075100MTV	¾" Hose Barb x 1" Male NPT Micro Valve	300	1"	15/32"	1	

John Guest® Fitting

The brand "**John Guest**" is a registered trademark of John Guest International Limited.

POLY MICRO VALVES						
PART NO	DESCRIPTION	MAX PSI	THREAD SIZE	OPENING THRU BALL	QTY	PRICE EA
LVPL025V	¼" Female NPT Micro Valve	150	¼"	⅜"	1	
LVPL038V	⅜" Female NPT Micro Valve	150	⅜"	⅜"	1	
LVPL050V	½" Female NPT Micro Valve	150	½"	15/32"	1	

MLV100V

POLY MANIFOLD MICRO VALVES						
PART NO	DESCRIPTION	MAX PSI	FLANGE SIZE	OPENING THRU BALL	QTY	PRICE EA
MLV100V	1" Manifold Micro Valve	300	1"	½"	1	

Polypropylene Bolted Ball Valves

FEATURES

- FKM (viton type) seals.
- Precision molded polypropylene is reinforced with fiberglass for additional strength.
- Self-aligning ball moves freely against the PTFE seats for smooth operation. The valve opens and closes with very little pressure on the handle.
- Ball is diamond turned, after molding, to make it spherically perfect, which provides precise contact between ball and seats.
- PTFE self-lubricating stem bushings and seats cannot stick or bind.
- Stainless steel bolts.

4 BOLT VALVES						
PART NO	DESCRIPTION	MAX PSI	PIPE SIZE	OPENING THRU BALL	QTY	PRICE EA
V050	½" Full Port Valve	150	½"	¾"	24/box	
V075	¾" Full Port Valve	150	¾"	¾"	24/box	
V100	1" Standard Port Valve	150	1"	¾"	24/box	
V100FP	1" Full Port Valve	150	1"	1"	24/box	
V125	1¼" Standard Port Valve	150	1¼"	1"	24/box	
V125FP	1¼" Full Port Valve	150	1¼"	1½"	24/box	
V150	1½" Full Port Valve	150	1½"	1½"	24/box	
V200	2" Standard Port Valve	150	2"	1½"	24/box	

For *faster* shipping, order in box quantities.

FEATURES FOR LOCKING DEVICE

- 304 Stainless steel construction.
- Installs under valve handle.
- Comes complete with handle and locking device.
- Padlock not included*

LOCKING DEVICE				
PART NO	DESCRIPTION	VALVE USED	QTY	PRICE EA
VL20153*	Locking Device	V125FP, V150 & V200	1	

FEATURES FOR MOUNTING BRACKETS

- 316 Stainless steel construction.
- Straight and 90° available.

MOUNTING BRACKETS				
PART NO	DESCRIPTION	VALVE USED	QTY	PRICE EA
V10270	Straight Mounting Bracket	V100FP & V125	1	
V10271	90° Mounting Bracket	V100FP & V125	1	
V25270	Straight Mounting Bracket	V150 & V200	1	
V25271	90° Mounting Bracket	V150 & V200	1	

FEATURES FOR REMOVABLE HANDLE KIT

- Removable handle deters opening the valve for safety, vandalism and theft.

REMOVABLE HANDLE KIT				
PART NO	DESCRIPTION	VALVE USED	QTY	PRICE EA
VRH200K	Removable Handle Kit	V125FP, V150 & V200	1	

FEATURES FOR HANDLE RISERS

- Allows extra clearance between handle and body for tight spaces.

HANDLE RISERS				
PART NO	DESCRIPTION	VALVE USED	QTY	PRICE EA
V10153138BL	1" x 1⅜" Handle Offset	V075BL & V100BL	1	
V10153138	1" x 1⅜" Handle Offset	V100FP, V125, V075SL & V100SL	1	
V20153138BL	2" x 1⅜" Handle Offset	MV200BL, V125BL & V150BL	1	
V20153138	2" x 1⅜" Handle Offset	V125FP, V150, V200 V125SL, V150SL	1	
V25153138BL	2" FP x 1⅜" Handle Offset	MV220BL & MV300BL	1	
V25153138	2" FP x 1⅜" Handle Offset	V200FP & V200SL	1	

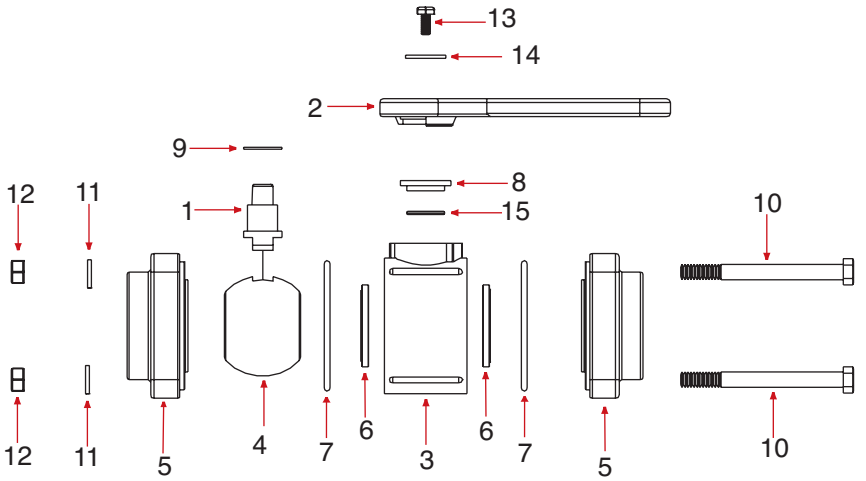

REPLACEMENT PARTS V050-V075-V100

ITEM	PART NO	DESCRIPTION	QTY	PRICE EA
1	V07151A	Stem	1	
2	V10153A	Handle	1	
3	V07254	Valve Body	1	
4	V07155*	Valve Ball	1	
5	V05256	½" End Plate	2	
5	V07257	¾" End Plate	2	
5	V07256	1" End Plate	2	
6	V07258A*	Ball Seat	2	
7	V07264*	FKM (viton type) Valve Body O-Ring	2	
8	V07159*	Upper Stem Bushing	1	
9	V07060*	Thrust Washer	1	
10	V07017	¼" x 3" SS Body Bolt	4	
11	V07018	¼" SS Lock Washer	4	
12	V07019	¼" SS Nut	4	
13	V10020A	#10 x ¾" SS Handle Bolt	1	
14	V07021A	SS Handle Washer	1	
15	V07163*	FKM (viton type) Stem O-Ring	1	
N/S	V07200	Repair Kit	1	

REPLACEMENT PARTS V100FP-V125

ITEM	PART NO	DESCRIPTION	QTY	PRICE EA
1	V10151A	Stem	1	
2	V10153A	Handle	1	
3	V10254	Valve Body	1	
4	V10155*	Valve Ball	1	
5	V10257	1" Full Port End Plate	2	
5	V10256	1¼" End Plate	2	
6	V10258A*	Ball Seat	2	
7	V10264	FKM (viton type) Valve Body O-Ring	2	
8	V10159*	Upper Stem Bushing	1	
9	V10060*	Thrust Washer	1	
10	V10117	5/16" x 3½" SS Body Bolt	4	
11	V10118	5/16" SS Lock Washer	4	
12	V10119	5/16" SS Nut	4	
13	V10020A	#10 x ¾" SS Handle Bolt	1	
14	V07021A	SS Handle Washer	1	
15	V10163*	FKM (viton type) Stem O-Ring	1	
N/S	V10200	Repair Kit	1	
N/S	V10270	Straight Mounting Bracket	1	
N/S	V10271	90° Mounting Bracket	1	

REPLACEMENT PARTS V125FP-V150-V200

ITEM	PART NO	DESCRIPTION	QTY	PRICE EA
1	V20151M	Stem	1	
2	V20153	Handle	1	
2	V20353T	T Handle	1	
N/S	V20353C	1⅛" Plug for T-Handle (Cap Plug)	1	
3	V20254	Valve Body	1	
4	V20255A*	Valve Ball	1	
5	V20256	2" End Plate	2	
5	V20257	1½" End Plate	2	
5	V20267	1¼" Full Port End Plate	2	
6	V20258A*	Ball Seat	2	
7	V20264*	FKM (viton type) Valve Body O-Ring	2	
8	V20159*	Upper Stem Bushing	1	
9	V20060*	Thrust Washer	1	
10	V20017	⅜" x 4" SS Body Bolt	4	
11	V20018	⅜" SS Lock Washer	4	
12	V20019	⅜" 16 SS Hex Nut	4	
13	V20020	¼" x ½" SS Handle Bolt	1	
14	V20021	SS Handle Washer	1	
15	V20163*	FKM (viton type) Stem O-Ring	1	
N/S	V20200	Repair Kit	1	

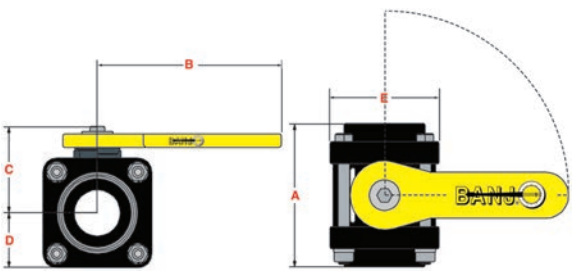

DIMENSION CHART IN INCHES (REFER TO DRAWING ABOVE)

PART NO	DESCRIPTION	A	B	C	D	E
V050	Full Port Valve	3.44	3.37	2.06	1.25	2.50
V075	Full Port Valve	3.44	3.37	2.06	1.25	2.50
V100	Standard Port Valve	3.44	3.37	2.06	1.25	2.50
V100FP	Full Port Valve	4.19	3.31	2.44	1.81	3.50
V125	Standard Port Valve	4.19	3.31	2.44	1.81	3.50
V125FP	Full Port Valve	4.72	5.90	2.70	1.92	3.50
V150	Full Port Valve	4.72	5.90	2.70	1.92	3.50
V200	Standard Port Valve	4.72	5.90	2.70	1.92	3.50

***Valve repair kits contain items marked with asterisk :**

1 Ball 2 Body O-Rings 1 Thrust Washer
2 Ball Seats 1 Upper Stem Bushing 1 Stem O-Ring

Polypropylene Bolted Ball Valves

FEATURES

- FKM (viton type) seals.
- PTFE self-lubricating stem bushings and seats cannot stick or bind.
- Precision molded in polypropylene.
- Polypropylene is reinforced with fiberglass for additional strength.
- Self-aligning ball moves freely against the PTFE seats for smooth operation.
- Valve opens and closes with very little pressure on the handle.
- Ball is diamond turned, after molding, to make it spherically perfect, which provides precise contact between ball and seats.
- Stainless steel bolts.

6 BOLT VALVES						
PART NO	DESCRIPTION	MAX PSI	PIPE SIZE	OPENING THRU BALL	QTY	PRICE EA
V200FP	2" Full Port Valve	150	2"	2"	8/box	
V300	3" Standard Port Valve	100	3"	2½"	8/box	
V300FP	3" Full Port Valve	100	3"	3"	6/box	
V400	4" Standard Port Valve	75	4"	3½"	4/box	

6 BOLT VALVES w/ "F" ADAPTER						
PART NO	DESCRIPTION	MAX PSI	PIPE SIZE	OPENING THRU BALL	QTY	PRICE EA
VFMT200FP	2" Full Port Valve w/"F" Adapter	150	2"	2"	6/box	
VFMT200FPSH	2" Full Port Valve w/"F" Adapter	150	2"	2"	6/box	

For *faster* shipping, order in box quantities.

VFMT200FP
(shown w/ long handle)

FEATURES FOR LOCKING HANDLE

- Stainless steel hardware.
- Locks in open and closed positions.
- Locking handle replaces standard handle.**
- Padlock not included.*

VL25153

LOCKING HANDLE FEATURES				
PART NO	DESCRIPTION	VALVE USED	QTY	PRICE EA
VL25153*	Locking Handle	V200FP, V300, V300FP, V400 VFMT200FP & VFMT200FPSH	1	

**Sold separately.

FEATURES FOR MOUNTING BRACKETS

- 316 Stainless steel construction.
- Straight and 90° available.

MOUNTING BRACKETS				
PART NO	DESCRIPTION	VALVE USED	QTY	PRICE EA
V25270	Straight Mounting Bracket	V200FP, V300, V300FP, V400 VFMT200FP & VFMT200FPSH	1	
V25271	90° Mounting Bracket	V200FP, V300, V300FP, V400 VFMT200FP & VFMT200FPSH	1	

FEATURES FOR REMOVABLE HANDLE KIT

- Removable handle deters opening the valve for safety, vandalism and theft.

REMOVABLE HANDLE KIT				
PART NO	DESCRIPTION	VALVE USED	QTY	PRICE EA
VRH220K	Removable Handle Kit	V200FP, V300 & V300FP	1	

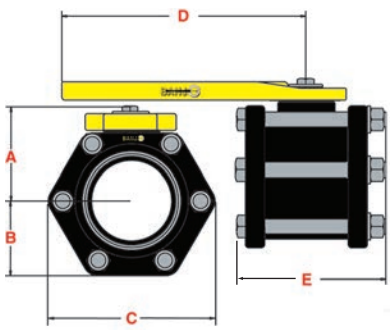

DIMENSION CHART IN INCHES (REFER TO DRAWING ON LEFT)						
PART NO	DESCRIPTION	A	B	C	D	E
V200FP	Full Port Valve	3.25	2.38	5.44	9.25	5.50
V300	Standard Port Valve	3.53	2.69	6.28	9.25	6.06
V300FP	Full Port Valve	4.25	3.25	7.35	9.25	6.40
V400	Standard Port Valve	4.50	3.60	8.19	9.25	7.88
VFMT200FP	Full Port Valve	3.38	2.38	5.44	9.25	8.30
VFMT200FPSH	Full Port Valve	3.38	2.38	5.44	5.25	8.30

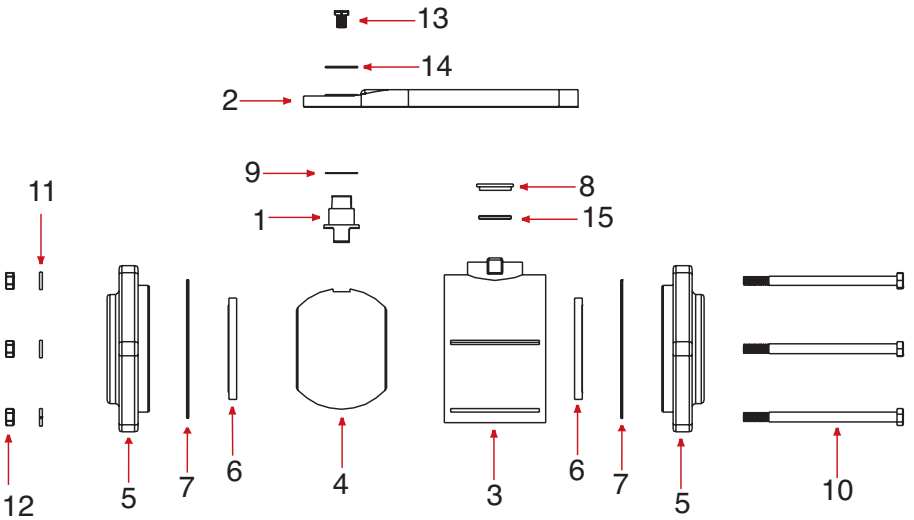

REPLACEMENT PARTS V200FP-VFMT200FP-VFMT200FPSH-V300-V300FP-V400				
ITEM	PART NO	DESCRIPTION	QTY	PRICE EA
1	V25151B	Stem	1	
1	V30151	Stem (new style for V300,V300FP & V400)	1	
2	V25153	Handle	1	
8	V25160*	Upper Stem Bushing	1	
9	V25060*	Thrust Washer	1	
11	A108V	¼" SS Lock Washer	4	
12	V20019	⅜" 16 SS Hex Nut	4	
13	V25020	#10 x ¾" SS Handle Bolt	1	
14	V25121	SS Handle Washer	1	
15	V25163*	FKM (viton type) Stem O-Ring	1	
N/S	V25271	90° Mounting Bracket Fits V150, V200, V200FP, V300 & V300FP	1	
N/S	V25270	Straight Mounting Bracket Fits V150, V200, V200FP, V300 & V300FP	1	

REPLACEMENT PARTS V200FP-VFMT200FP-VFMT200FPSH				
ITEM	PART NO	DESCRIPTION	QTY	PRICE EA
2	V25153SH	Short Handle for VFMT200FPSH	1	
3	V25254	Valve Body	1	
4	V25255A*	Valve Ball	1	
5	V25256	2" End Plate Female NPT	2	
5	VMT25256	2" End Plate Male NPT	1	
5	VF25256	2" End Plate Male Adapter	1	
6	V25258A*	Ball Seat	2	
7	V25264*	FKM (viton type) Valve Body O-Ring	2	
10	V25017	⅜" x 4½" SS Body Bolt	6	
N/S	V25200	Repair Kit	1	

REPLACEMENT PARTS V300				
ITEM	PART NO	DESCRIPTION	QTY	PRICE EA
3	V30254	Valve Body	1	
4	V30255*	Valve Ball	1	
5	V30264	3" End Plate	2	
6	V30258A*	Ball Seat	2	
7	V30265*	FKM (viton type) Valve Body O-Ring	2	
10	V30017	⅜" x 5" SS Body Bolt	6	
N/S	V30200	Repair Kit	1	

REPLACEMENT PARTS V300FP				
ITEM	PART NO	DESCRIPTION	QTY	PRICE EA
3	V35254	Valve Body	1	
4	V35255A*	Valve Ball	1	
5	V35264	3" FP End Plate	2	
6	V35258A*	Ball Seat	2	
7	V35265*	FKM (viton type) Valve Body O-Ring	2	
10	V35017	⅜" x 6" SS Body Bolt	6	
N/S	V35200	Repair Kit	1	

REPLACEMENT PARTS V400				
ITEM	PART NO	DESCRIPTION	QTY	PRICE EA
3	V40254	Valve Body	1	
4	V40255*	Valve Ball	1	
5&6	V40264	End Plate w/PTFE Ball Seat	2	
7	V40265*	FKM (viton type) Valve Body O-Ring	2	
10	V40017	⅜" x 7½" SS Body Bolt	6	
N/S	V40200	Repair Kit	1	

*Valve repair kits contain items marked with asterisk :

1 Ball	2 Body O-Rings	1 Thrust Washer
2 Ball Seats	1 Upper Stem Bushing	1 Stem O-Ring

2" Full Port Polypropylene Bolted Ball Valves

FEATURES

- FKM (viton type) seals.
- Stainless steel bolts.
- PTFE self-lubricating stem bushings and seats cannot stick or bind.
- Precision molded in polypropylene.
- Polypropylene is reinforced with fiberglass for additional strength.
- Self-aligning ball moves freely against the PTFE seats for smooth operation.
- Valve opens and closes with very little pressure on the handle.
- Ball is diamond turned, after molding, to make it spherically perfect, which provides precise contact between ball and seats.
- Maximum operating pressure 150 P.S.I.@70°F & 75 P.S.I.@150°F.

4 BOLT FULL PORT VALVES						
PART NO	DESCRIPTION	MAX PSI	PIPE SIZE	OPENING THRU BALL	QTY	PRICE EA
VFMT204FP	2" Full Port Valve Male NPT x Male Adapter	150	2"	2"	6/box	
V204FP	2" Full Port Valve	150	2"	2"	8/box	

For *faster* shipping, order in box quantities.

2" Full Port ANSI Flange Bolted Ball Valves

FEATURES

- 100% PTFE seats.
- FKM (viton type) seals.
- Glass-filled polypropylene.
- Unique compact design.
- Lightweight.
- Maximum operating pressure 150 P.S.I.@70°F & 75 P.S.I.@150°F.

FULL PORT ANSI FLANGE VALVES						
PART NO	DESCRIPTION	MAX PSI	PIPE SIZE	OPENING THRU BALL	QTY	PRICE EA
VSF200FPAF	2" Full Port Valve Male Adapter x 2" ANSI Flange	150	2"	2"	6/box	
VSMT200FPAF	2" Full Port Valve Male NPT x 2" ANSI Flange	150	2"	2"	6/box	

See our 2" ANSI flange gaskets on page 113!

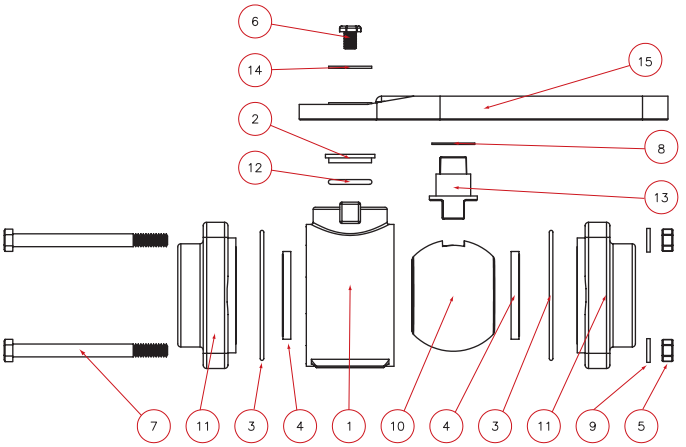

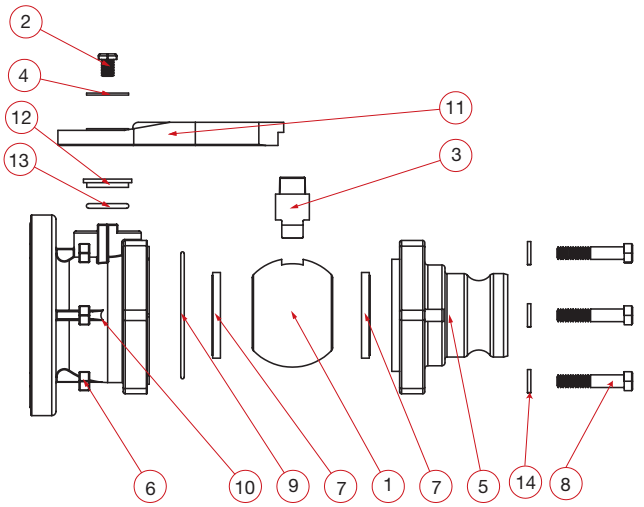

REPLACEMENT PARTS VFMT204FP				
ITEM	PART NO	DESCRIPTION	QTY	PRICE EA
1	V25254	2" FP Valve Body	1	
2	V25160	Upper Stem Bushing	1	
3	V25264	FKM (viton type) Body O-Ring	2	
4	V25258A	2" FP Ball Seat	2	
5	V20019	3/8" 16 SS Hex Nut	4	
6	V25020	3/8" x 1/2" Handle Bolt	1	
7	V25017	3/8" x 4 1/2" SS Body Bolt	4	
8	V25060	Thrust Bushing	1	
9	V20018	3/8" SS Lock Washer	4	
10	V25255A	2" Ball	1	
11	VF25356	2" End Plate Male Adapter	1	
11	VMT25356	2" MPT End Plate	1	
12	V25163	FKM (viton type) Stem O-Ring	1	
13	V25151B	Stem	1	
14	V25121	Handle Washer	1	
15	V25153	Handle	1	

REPLACEMENT PARTS VSF200FPAF				
ITEM	PART NO	DESCRIPTION	QTY	PRICE EA
1	V25255A	2" FP Ball	1	
2	V25020	3/8" x 1/2" Handle Bolt	1	
3	VS25151B	Stem	1	
4	V25121	Handle Washer	1	
5	VF25256	2" FP "F" End Plate	1	
6	V20019	3/8"-16 SS Hex Nut	6	
7	V25258A	2" FP Ball Seat	2	
8	V20010	3/8"-16 x 2" HHCS	6	
9	V25264	FKM (viton type) Body O-Ring	1	
10	V25245	2" FP ANSI Flange Valve Body	1	
11	V25153SH	Handle	1	
12	V25160	Upper Stem Bushing	1	
13	V25163	FKM (viton type) Stem O-Ring	1	
14	V20018	3/8" SS Lock Washer	6	

REPLACEMENT PARTS V204FP				
ITEM	PART NO	DESCRIPTION	QTY	PRICE EA
1	V25254	2" FP Valve Body	1	
2	V25160	Upper Stem Bushing	1	
3	V25264	FKM (viton type) Body O-Ring	2	
4	V25258A	2" FP Ball Seat	2	
5	V20019	3/8" 16 SS Hex Nut	4	
6	V25020	3/8" x 1/2" Handle Bolt	1	
7	V25017	3/8" x 4 1/2" SS Body Bolt	4	
8	V25060	Thrust Bushing	1	
9	V20018	3/8" SS Lock Washer	4	
10	V25255A	2" Ball	1	
11	V25456	2" Full Port End Plate	2	
12	V25163	FKM (viton type) Stem O-Ring	1	
13	V25151B	Stem	1	
14	V25121	Handle Washer	1	
15	V25153	Handle	1	

REPLACEMENT PARTS VSMT200FPAF				
ITEM	PART NO	DESCRIPTION	QTY	PRICE EA
1	V25255A	2" FP Ball	1	
2	V25020	Handle Bolt	1	
3	VS25151B	Stem	1	
4	V25121	Handle Washer	1	
5	VMT25256	2" FP Male Thread End Plate	1	
6	V20019	3/8"-16 SS Hex Nut	6	
7	V25258A	2" FP Ball Seat	2	
8	V20010	3/8"-16 x 2" HHCS	6	
9	V25264	FKM (viton type) Body O-Ring	1	
10	V25245	2" FP ANSI Flange Valve Body	1	
11	V25153SH	Handle	1	
12	V25160	Upper Stem Bushing	1	
13	V25163	FKM (viton type) Stem O-Ring	1	
14	V20018	3/8" SS Lock Washer	6	

2" Standard Port Ball Valves "Stubby Valve"™

PATENTED

FEATURES

- Stainless steel bolts.
- Glass reinforced polypropylene.
- Multiple design options.
- Unique patented compact design.
- Lightweight.
- Maximum operating pressure 100 P.S.I. @ 70°F & 75 P.S.I. @ 150°F.
- All PTFE seals

VSF200

VSMT200

VSFMT200

VSFHB200

2" STANDARD PORT STUBBY VALVES						
PART NO	DESCRIPTION	MAX PSI	PIPE SIZE	OPENING THRU BALL	QTY	PRICE EA
VSF200	2" Male Adapter x 2" Female NPT	100	2"	1½"	24/box	
VSMT200	2" Male NPT x 2" Female NPT	100	2"	1½"	24/box	
VSFMT200	2" Male Adapter x 2" Male NPT	100	2"	1½"	24/box	
VSFHB200	2" Male Adapter x 2" Hose Barb	100	2"	1½"	24/box	

For *faster* shipping, order in box quantities.

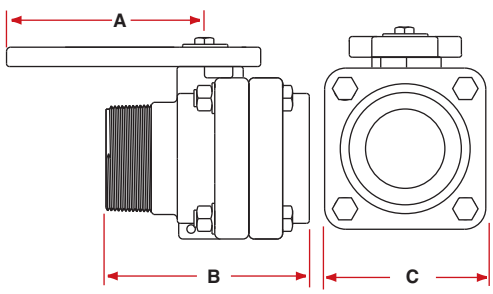

DIMENSION CHART IN INCHES (REFER TO DRAWING ABOVE)				
PART NO	DESCRIPTION	A	B	C
VSF200	2" Male Adapter x 2" Female NPT	4.38	4.72	3.56
VSMT200	2" Male NPT x 2" Female NPT	4.38	4.50	3.56
VSFMT200	2" Male Adapter x 2" Male NPT	4.38	5.88	3.56
VSFHB200	2" Male Adapter x 2" Hose Barb	4.38	6.90	3.56

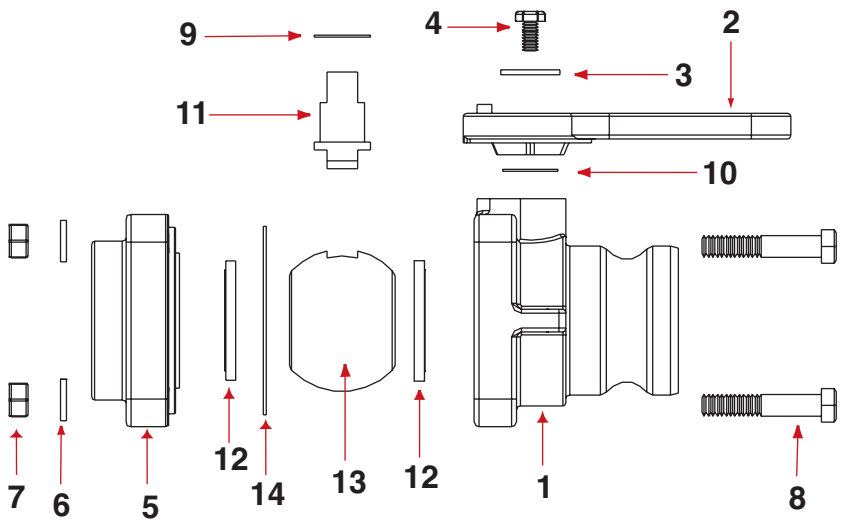

*Valve repair kits contain items marked with asterisk:

1 Ball
2 Ball Seats
1 Upper Stem Bushing
1 Body Gasket
1 Thrust Bearing

NOTE: End plates and body style may vary from picture.

REPLACEMENT PARTS VSF200-VSMT200-VSFMT200-VSFHB200				
ITEM	PART NO	DESCRIPTION	QTY	PRICE EA
2	VS20152SH	2" Short Style Handle	1	
3	V20021	Handle Washer	1	
4	V20020	Handle Bolt	1	
6	V20018	Lock Washer	4	
7	V20019	3/8" 16 SS Hex Nut	4	
8	V20010SS	SS Body Bolt	4	
9	V20060*	Upper Stem Bushing	1	
10	V20060*	Thrust Bearing	1	
11	VS20151	Stem	1	
12	VS20258A*	Seat	2	
13	VS20255*	Ball	1	
14	V21204*	Body Gasket	1	
N/S	VS20200	Repair Kit	1	

REPLACEMENT PARTS VSF200-VSFMT200				
ITEM	PART NO	DESCRIPTION	QTY	PRICE EA
1	VF20254	2" "F" Body	1	
5	VSMT20256	2" Male NPT End Plate	1	

REPLACEMENT PARTS VSFHB200				
ITEM	PART NO	DESCRIPTION	QTY	PRICE EA
1	VF20254	2" "F" Body	1	
5	VSHB20256	2" Hose Barb End Plate	1	

REPLACEMENT PARTS VSMT200				
ITEM	PART NO	DESCRIPTION	QTY	PRICE EA
1	VMT20254	2" Male NPT Body	1	
5	VS20256	2" Female End Plate	1	

2" Full Port Ball Valves "Stubby Valve"™

PATENTED

FEATURES

- Stainless steel bolts.
- 100% PTFE ball seats.
- Glass-filled polypropylene.
- FKM (viton type) body seals.
- Unique compact design.
- 100 P.S.I. @ 70°F and 75 P.S.I.@ 150°F.
- Lightweight.

VSMT204FP

VSF204FP

VS204FP

VSFMT204FP

VSFMT204HSFP

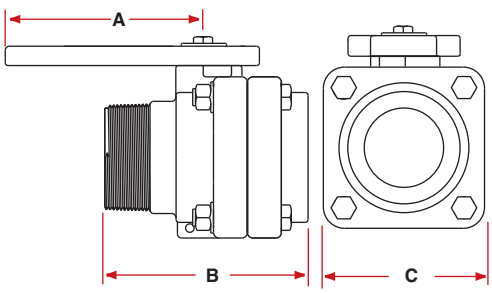

2" FULL PORT STUBBY VALVES						
PART NO	DESCRIPTION	MAX PSI	PIPE SIZE	OPENING THRU BALL	QTY	PRICE EA
VSMT204FP	2" Male NPT x 2" Female NPT	100	2"	2"	18/box	
VSF204FP	2" Male Adapter x 2" Female NPT	100	2"	2"	18/box	
VS204FP	2" Female NPT x 2" Female NPT	100	2"	2"	18/box	
VSFMT204FP	2" Male Adapter x 2" Male NPT	100	2"	2"	18/box	
VSFMT204HSFP	2" FP Male Adapter x 2" Male NPT w/ SS Ball, Stem & Handle	100	2"	2"	18/box	

DIMENSION CHART IN INCHES (REFER TO DRAWING ABOVE)				
PART NO	DESCRIPTION	A	B	C
VSMT204FP	2" Male NPT x 2" Female NPT	6.38	5.72	4.25
VSMT204HSFP	2" Male Adapter x 2" Male NPT w/ SS Ball, Stem & handle	5.94	6.50	4.25
VSF204FP	2" Male Adapter x 2" Female NPT	6.38	5.91	4.25
VS204FP	2" Female NPT x 2" Female NPT	6.38	5.19	4.25
VSFMT204FP	2" Male Adapter x 2" Male NPT	6.38	6.50	4.25

For *faster* shipping, order in box quantities.

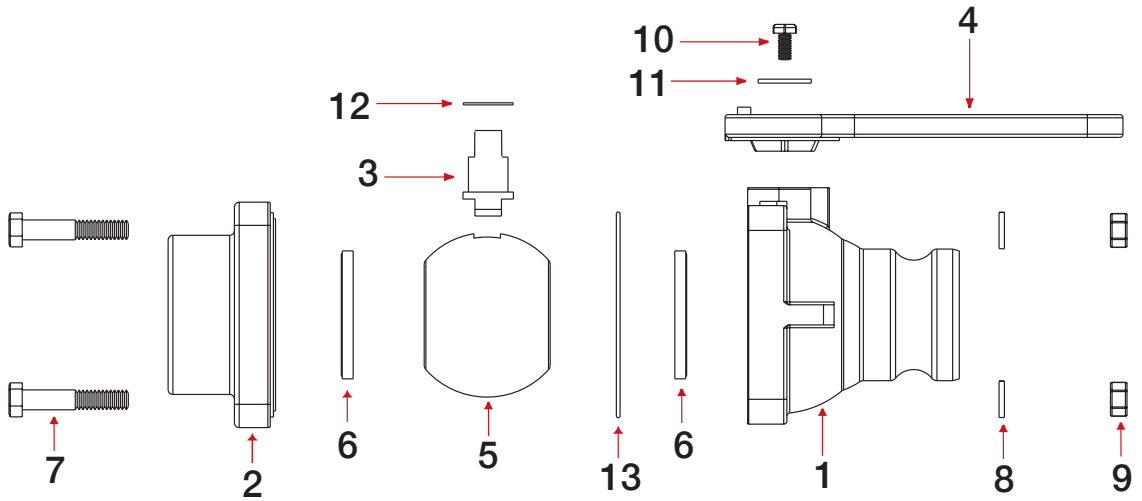

REPLACEMENT PARTS VSMT204FP-VSF204FP-VS204FP-VSFMT204FP				
ITEM	PART NO	DESCRIPTION	QTY	PRICE EA
2	VSMT25356	2" FP End Plate	1	
3	VS20151	Stem	1	
4	VS25153	2" FP Stubby Handle	1	
5	VS25255	2" FP Stubby Ball	1	
6	VS25258AR1	2" FP Stubby Seat	2	
7	V20010SS	3/8" - 16 x 2" SS Bolt	4	
8	V20018	3/8" SS Lock Washer	4	
9	V20019	3/8" 16 SS Hex Nut	4	
10	V20020	Retaining Bearing	1	
11	V20021	Handle Washer	1	
12	V20060	PFTE Bearing Gasket	2	
13	V25214V	FKM (viton type) Body Seal	1	

REPLACEMENT PARTS VSMT204FP				
ITEM	PART NO	DESCRIPTION	QTY	PRICE EA
1	VFT25254	2" FP Stubby Female NPT Body	1	
2	VSMT25356	2" FP Stubby MPT End Plate	1	

REPLACEMENT PARTS VSFMT204FP				
ITEM	PART NO	DESCRIPTION	QTY	PRICE EA
1	VF25254	2" FP Stubby Male Quick Connect Body	1	
2	VS25356	2" FP Stubby Female NPT End Plate	1	

REPLACEMENT PARTS VSF204FP				
ITEM	PART NO	DESCRIPTION	QTY	PRICE EA
1	VF25254	2" FP Stubby Male Quick Connect Body	1	
2	VS25356	2" FP Stubby Female NPT End Plate	1	

REPLACEMENT PARTS VS204FP				
ITEM	PART NO	DESCRIPTION	QTY	PRICE EA
1	VFT25254	2" FP Stubby Female NPT Body	1	
2	VSMT25356	2" FP Stubby MPT End Plate	1	

NOTE: End plates and body style may vary from picture.

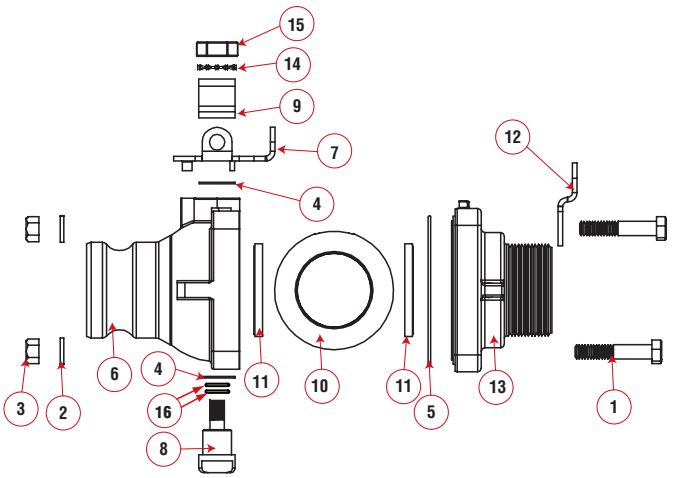

REPLACEMENT PARTS VSFMT204HSFP				
ITEM	PART NO	DESCRIPTION	QTY	PRICE EA
1	V20010SS	3/8" - 16 x 2" SS Bolt	4	
2	V20018	3/8" SS Lock Washer	4	
3	V20019	3/8" 16 SS Hex Nut	4	
4	V20060	PFTE Bearing Gasket	2	
5	V25214V	FKM (viton type) Body Seal	1	
6	VF25254	2" Full Port Male Adapter Body	1	
7	VS20101SS	SS Handle Stop	1	
8	VS20151SS	SS Stem	1	
9	VS25153SS	SS Handle	1	
10	VS25255SS	2" FP SS Ball	1	
11	VS25258AR1	2" FP Stubby Seat	2	
12	VS20102SS	SS Handle Lock	1	
13	VSMT25356	2" FP Stubby MPT End Plate	1	
14	VSS15020	SS Handle Nut	1	
15	VS20021	Washer	1	
16	VS20163	FKM (viton type) O-ring	2	

3" Standard Port Ball Valves "Stubby Valve"™

PATENTED

FEATURES

- Stainless steel bolts.
- Glass reinforced polypropylene.
- FKM (viton type) body seals.
- Three design options for standard and one for full port.
- Unique patented compact design.
- 100 P.S.I. @ 70°F and 75 P.S.I.@ 150°F.
- Lightweight.
- All PTFE ball seats.

VSMT300

VSF300

VSFMT300

3" STANDARD PORT STUBBY VALVES						
PART NO	DESCRIPTION	MAX PSI	PIPE SIZE	OPENING THRU BALL	QTY	PRICE EA
VSMT300	3" Female NPT x 3" Male NPT	100	3"	2½"	6/box	
VSF300	3" Female NPT x 3" Male Adapter	100	3"	2½"	6/box	
VSFMT300	3" Male NPT x 3" Male Adapter	100	3"	2½"	6/box	

For *faster* shipping, order in box quantities.

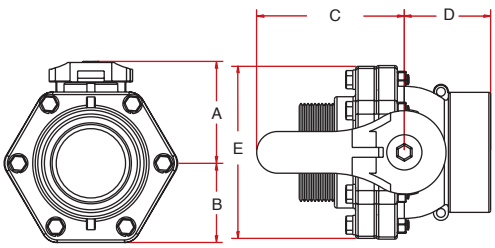

DIMENSION CHART IN INCHES (REFER TO DRAWING ABOVE)						
PART NO	DESCRIPTION	A	B	C*	D	E
VSMT300	3" Female NPT x 3" Male NPT	3.63	2.84	5.25/9.25	4.60	5.09
VSF300	3" Female NPT x 3" Male Adapter	3.63	2.84	5.25/9.25	4.60	5.65
VSFMT300	3" Male NPT x 3" Male Adapter	3.63	2.84	5.25/9.25	4.60	7.84

*Short handles: Add SH to end of part number. Dimension C = 5.25"

NOTE: End plates and body style may vary from picture.

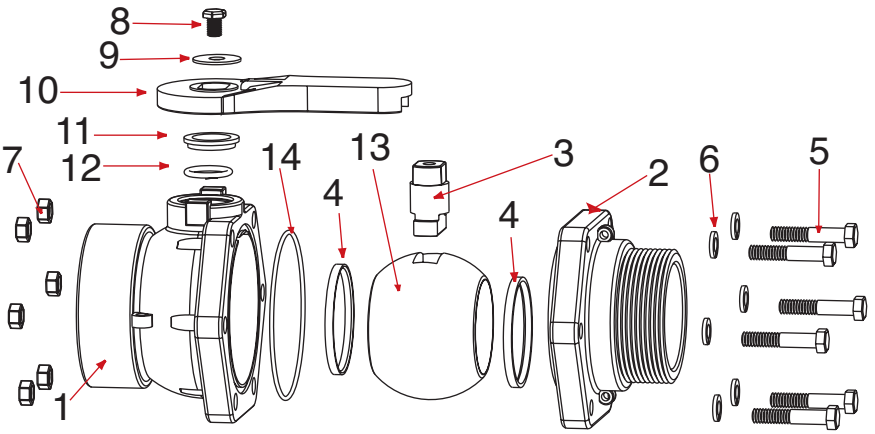

REPLACEMENT PARTS VSMT300-VSF300-VSFMT300				
ITEM	PART NO	DESCRIPTION	QTY	PRICE EA
3	VS25151B	Short Stem	1	
4	VS30258	3" Stubby Seat	2	
5	V20010SS	⅜" - 16 x 2" SS Bolt	6	
6	V20018	⅜" SS Lock Washer	6	
7	V20019	⅜" 16 SS Hex Nut	6	
8	V25020	⅜" x ½" Handle Bolt	1	
9	V25121	Handle Washer	1	
10	V25153	Handle-Straight	1	
11	V25160	Upper Stem Bushing	1	
12	V25163	FKM (viton type) Stem O-Ring	1	
13	VS30255	3" Ball	1	
14	V30265	FKM (viton type) Body O-Ring	1	

REPLACEMENT PARTS VSFMT300				
ITEM	PART NO	DESCRIPTION	QTY	PRICE EA
1	VSMT30254	3" MPT Stubby Body	1	
2	VSF30264	3" Stubby "F" End Plate	1	

REPLACEMENT PARTS VSMT300				
ITEM	PART NO	DESCRIPTION	QTY	PRICE EA
1	VS30254	3" Stubby Body	1	
2	VSMT30264	3" Stubby Male NPT End Plate	1	

REPLACEMENT PARTS VSF300				
ITEM	PART NO	DESCRIPTION	QTY	PRICE EA
1	VS30254	3" Stubby Body	1	
2	VSF30264	3" Stubby "F" End Plate	1	

3" Full Port Ball Valves
"3" Stubby Valve"™

PATENTED

FEATURES

- Stainless steel bolts.
- Glass reinforced polypropylene.
- FKM (viton type) body seals.
- Unique patented compact design.
- 100 P.S.I. @ 70°F and 75 P.S.I.@ 150°F.
- Lightweight.
- All PTFE ball seats.

VSFMT300FP

VSFMT300HSFP

3" FULL PORT PORT STUBBY VALVES						
PART NO	DESCRIPTION	MAX PSI	PIPE SIZE	OPENING THRU BALL	QTY	PRICE EA
VSFMT300FP	3" FP Male Adapter x 3" Male NPT	100	3"	3"	6/box	

3" FULL PORT STUBBY VALVES w/SS						
PART NO	DESCRIPTION	MAX PSI	PIPE SIZE	OPENING THRU BALL	QTY	PRICE EA
VSFMT300HSFP	3" FP Male Adapter x 3" Male NPT w/SS ball, Stem & Handle	100	3"	3"	6/box	

For *faster* shipping, order in box quantities.

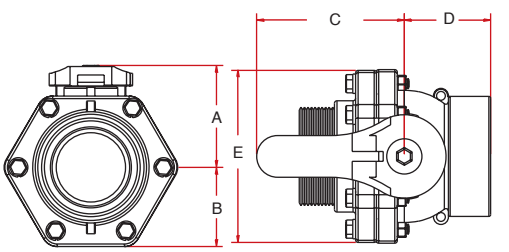

DIMENSION CHART IN INCHES (REFER TO DRAWING ABOVE)						
PART NO	DESCRIPTION	A	B	C*	D	E
VSFMT300FP	3" FP Male Adapter x 3" Male NPT	9.25	8.19	7.31	0.91	7.34
VSFMT300HSFP	3" FP Male Adapter x 3" Male NPT w/SS ball, Stem & Handle	9.88	8.19	7.31	0.88	7.31

*Short handles: Add SH to end of part number. Dimension C = 5.25"

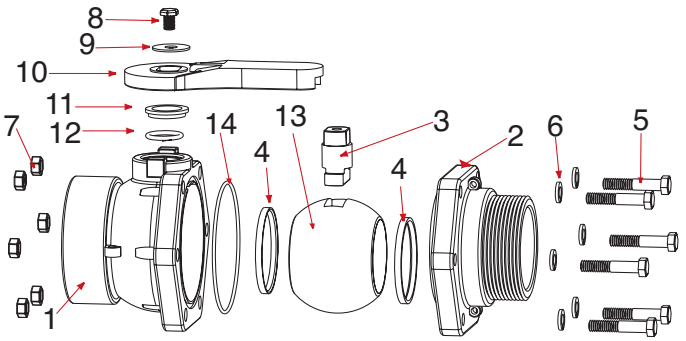

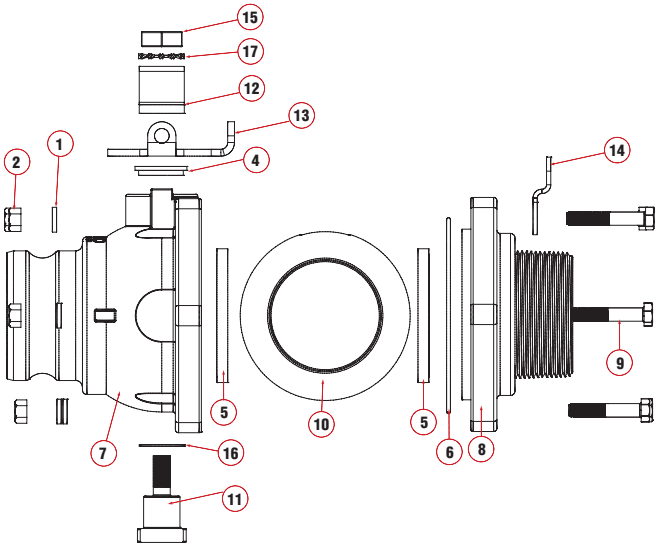

REPLACEMENT PARTS VSFMT300FP				
ITEM	PART NO	DESCRIPTION	QTY	PRICE EA
1	VSF35254	3" FP Stubby "F" Body	1	
2	VSMT35256	3" FP Stubby Male NPT End Plate	1	
3	VS25151B	Short Stem	1	
4	VS35258	3" FP Stubby Seat	1	
5	V20010SS	⅜" - 16 x 2" SS Bolt	6	
6	V20018	⅜" SS Lock Washer	6	
7	V20019	⅜" 16 SS Hex Nut	6	
8	V25020	⅜" x ½" Handle Bolt	1	
9	V25121	Handle Washer	1	
10	V25153	Handle-Straight	1	
11	V25160	Upper Stem Bushing	1	
12	V25163	FKM (viton type) Stem O-Ring	1	
13	V35255A	3" Ball	1	
14	V35265	FKM (viton type) Body O-Ring	1	

REPLACEMENT PARTS VSFMT300HSFP				
ITEM	PART NO	DESCRIPTION	QTY	PRICE EA
1	V20018	⅜" SS Lock Washer	6	
2	V20019	⅜" 16 SS Hex Nut	6	
3	V25163	FKM (viton type) Stem O-Ring	1	
4	V25160	Upper Stem Bushing	1	
5	VS35258	3" FP Stubby Seat	2	
6	V35265	FKM (viton type) Valve Body O-Ring	1	
7	VSF35254	3" FP Stubby "F" Body	1	
8	VSMT35256	3" FP Stubby MPT End Plate	1	
9	V20010SS	⅜" - 16 x 2" SS Bolt	6	
10	V35255ASS	3" FP SS Ball	1	
11	VS30151SS	SS Stem	1	
12	VS30153SS	SS Handle	1	
13	VS30101SS	SS Handle Stop	1	
14	VS30102SS	SS Handle Lock	1	
15	VSS30020	¾"-16 SS Jam Nut	1	
16	V25060	Thrust Washer	1	
17	VS30021	Washer	1	

3-Way Poly Ball Valves

FEATURES

- Stainless steel bolts.
- Precision molded in polypropylene. Polypropylene is reinforced with fiberglass for additional strength.
- Self-aligning ball moves freely against the PTFE seats for smooth operation.
- Ball is diamond turned, after molding, to make it spherically perfect, which provides precise contact between ball and seats.
- PTFE self-lubricating stem bushings and seats.
- Maximum operating pressure 100 P.S.I.
- FKM (viton type) body seals.

V075BL
V100BL

V125BL
V150BL

V200BL

3 WAY BOTTOM LOAD VALVES							
PART NO	DESCRIPTION	MAX PSI	PIPE SIZE	OPENING THRU BALL	HANDLE TYPE	QTY	PRICE EA
V075BL	¾" 3-Way Bottom Load Poly Valve	100	¾"	1"	T	18/box	
V100BL	1" 3-Way Bottom Load Poly Valve	100	1"	1"	T	18/box	
V125BL	1¼" 3-Way Bottom Load Poly Valve	100	1¼"	1½"	T	12/box	
V150BL	1½" 3-Way Bottom Load Poly Valve	100	1½"	1½"	T	12/box	
V200BL	2" 3-Way Bottom Load Poly Valve	100	2"	2"	Straight	8/box	
VT200BL	2" 3-Way Bottom Load Poly Valve	100	2"	2"	T	8/box	

BOTTOM LOAD: Directional flow, right or left. Valve can be turned off to stop flow.

V075SL
V100SL

V125SL
V150SL

V200SL
VT200SL

3 WAY SIDE LOAD VALVES							
PART NO	DESCRIPTION	MAX PSI	PIPE SIZE	OPENING THRU BALL	HANDLE TYPE	QTY	PRICE EA
V075SL	¾" 3-Way Side Load Poly Valve	100	¾"	1"	Straight	18/box	
V100SL	1" 3-Way Side Load Poly Valve	100	1"	1"	Straight	18/box	
VT100SL	1" 3-Way Side Load Poly Valve	100	1"	1"	T	18/box	
V125SL	1¼" 3-Way Side Load Poly Valve	100	1¼"	1½"	T	12/box	
V150SL	1½" 3-Way Side Load Poly Valve	100	1½"	1½"	T	12/box	
V200SL	2" 3-Way Side Load Poly Valve	100	2"	2"	Straight	8/box	
VT200SL	2" 3-Way Side Load Poly Valve	100	2"	2"	T	8/box	

SIDE LOAD: Directional flow, right or left. Valve cannot be turned off.

For *faster* shipping, order in box quantities.

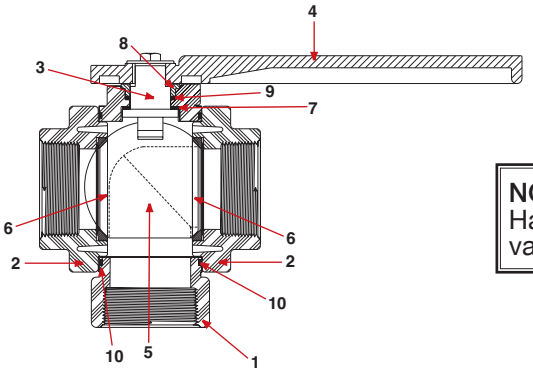

NOTE:
Handle style will vary from picture.

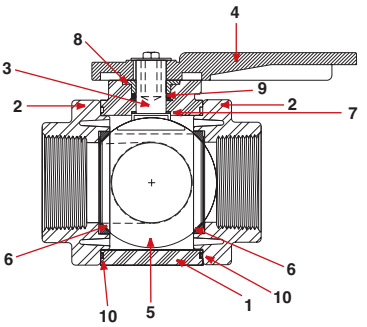

Bottom Load 3-Way Poly Ball Valves

REPLACEMENT PARTS V075BL-V100BL				
ITEM	PART NO	DESCRIPTION	QTY	PRICE EA
1	V07354B	¾" Valve Body	1	
1	V10354B	1" Valve Body	1	
2	V07357	¾" End Plate	2	
2	V10257	1" End Plate	2	
3	V10151A	Stem	1	
4	V10353TB	Handle -T	1	
5	V10355B	Ball	1	
6	V10258	Seats	2	
7	V10060	Thrust Bushing	1	
8	V10159	Upper Stem Bushing	1	
9	V10163	FKM (viton type) Stem O-Ring	1	
10	V10264	FKM (viton type) Body O-Ring	2	

REPLACEMENT PARTS V125BL-V150BL				
ITEM	PART NO	DESCRIPTION	QTY	PRICE EA
1	V20344B	1¼" Valve Body	1	
1	V20354B	1½" Valve Body	1	
2	V20267	1¼" End Plate	2	
2	V20257	1½" End Plate	2	
3	V20151M	Stem	1	
4	V20353TB	Handle -T	1	
5	V20355B	Ball	1	
6	VE20258A	Seats	2	
7	V20060	Thrust Bushing	1	
8	V20159	Upper Stem Bushing	1	
9	V20163	FKM (viton type) Stem O-Ring	1	
10	V20264	FKM (viton type) Body O-Ring	2	

REPLACEMENT PARTS V200BL-VT200BL				
ITEM	PART NO	DESCRIPTION	QTY	PRICE EA
1	V25354B	2" Valve Body	1	
2	V25356	2" End Plate	2	
3	V25151B	Stem	1	
4	V25353B	Handle-Straight	1	
4	V25353TB	Handle -T	1	
5	V25355B	Ball	1	
6	V25258	Seats	2	
7	V25060	Thrust Bushing	1	
8	V25160	Upper Stem Bushing	1	
9	V25163	FKM (viton type) Stem O-Ring	1	
10	V25264	FKM (viton type) Body O-Ring	2	

Side Load 3-Way Poly Ball Valves

REPLACEMENT PARTS V075SL-V100SL-VT100SL				
ITEM	PART NO	DESCRIPTION	QTY	PRICE EA
1	V07354S	¾" Valve Body	1	
1	V10354S	1" Valve Body	1	
2	V07357	¾" End Plate	2	
2	V10257	1" End Plate	2	
3	V10151A	Stem	1	
4	V10153A	Handle -Straight	1	
4	V10353TS	Handle-T	1	
5	V10355S	Ball	1	
6	V10258	Seats	2	
7	V10060	Thrust Bushing	1	
8	V10159	Upper Stem Bushing	1	
9	V10163	FKM (viton type) Stem O-Ring	1	
10	V10264	FKM (viton type) Body O-Ring	2	

REPLACEMENT PARTS V125SL-V150SL				
ITEM	PART NO	DESCRIPTION	QTY	PRICE EA
1	V20344S	1¼" Valve Body	1	
1	V20354S	1½" Valve Body	1	
2	V20267	1¼" End Plate	2	
2	V20257	1½" End Plate	2	
3	V20151M	Stem	1	
4	V20353TS	Handle -T	1	
4	V20153	Handle-Straight	1	
5	V20355S	Ball	1	
6	VE20258A	Seats	2	
7	V20060	Thrust Bushing	1	
8	V20159	Upper Stem Bushing	1	
9	V20163	FKM (viton type) Stem O-Ring	1	
10	V20264	FKM (viton type) Body O-Ring	2	

REPLACEMENT PARTS V200SL				
ITEM	PART NO	DESCRIPTION	QTY	PRICE EA
1	V25354S	2" Valve Body	1	
2	V25356	2" End Plate	2	
3	V25151B	Stem	1	
4	V25153SH	Handle-Straight	1	
4	V25353TS	Handle -T	1	
5	V25355S	Ball	1	
6	V25258	Seats	2	
7	V25060	Thrust Bushing	1	
8	V25160	Upper Stem Bushing	1	
9	V25163	FKM (viton type) Stem O-Ring	1	
10	V25264	FKM (viton type) Body O-Ring	2	

Polypropylene Nozzle Valves

FEATURES

- Lightweight hose end valve for convenient transfer of liquids into drums, tanks, etc.
- Angled end flange with 8" long polypropylene fill spout.
- All stainless bolts.

1½" & 2" POLY NOZZLE VALVES W/90° ELBOW							
PART NO	DESCRIPTION	MAX PSI	PIPE SIZE	OPENING THRU BALL	FEMALE NPT	QTY	PRICE EA
VA150	1½" Nozzle Valve w/90° Elbow	150	1½"x 8"	1½"	1½"	12/box	
VA200/150	2" x 1½" Nozzle Valve w/90° Elbow	150	1½"x 8"	1½"	2"x1½"	12/box	
VA200	2" Nozzle Valve w/90° Elbow	150	2" x 8"	1½"	2"	12/box	
VA200FP	2" FP Nozzle Valve w/90° Elbow	150	2" x 8"	2"	2"	6/box	

For *faster* shipping, order in box quantities.

FEATURES

- Lightweight hose end valve for convenient transfer of liquids into drums, tanks, etc.
- Angled end flange with 8" long polypropylene fill spout.
- All stainless bolts.

1" POLY NOZZLE VALVES W/45° ELBOW							
PART NO	DESCRIPTION	MAX PSI	PIPE SIZE	OPENING THRU BALL	FEMALE NPT	QTY	PRICE EA
VA100	1" Nozzle Valve w/45° Elbow	150	1"	¾"	1"	24/box	
UVA100FP	1" FP EPDM Nozzle Valve w/45° Elbow	100	1"	1"	1"	1	

Poly Dispensing Nozzle

FEATURES

- Glass reinforced polypropylene.
- 304 stainless steel handle, spring and pin.
- FKM (viton type) rubber parts **only.**
- Resists corrosion.
- 75 P.S.I. Maximum.

1" POLY DISPENSING NOZZLE							
PART NO	DESCRIPTION	MAX PSI	PIPE SIZE	OPENING THRU BALL	FEMALE NPT	QTY	PRICE EA
VN100	1" Poly Dispensing Nozzle	75	1"	N/A	1"	1	

REPLACEMENT PARTS VA150-VA200-VA200/150			
PART NO	DESCRIPTION	QTY	PRICE EA
V20151M	Stem	1	
V20152	Red Angle Handle	1	
V20254	Body	1	
V20255A*	Ball	1	
V20256	2" FPT End Plate	2	
V20257	1½" End Plate	2	
V20258A*	Ball Seat	2	
V20264*	FKM (viton type) Body O-RIng	2	
V20159*	Upper Stem Bushing	1	
V20060*	Thrust Washer	1	
V20261	2" FP Angle End Flange	1	
V20262	1½" FP Angle End Flange	1	
V20163*	FKM (viton type) Stem O-Ring	1	
V20166	1½" x 8" Nozzle Pipe	1	
V25165	2" x 8" Nozzle Pipe	1	
V20017	⅜" x 4½" SS Bolt	4	
V20018	⅜" SS Lock Washer	4	
V20019	⅜" 16 SS Hex Nut	4	
V20020	⅜" x ½" Handle Bolt	1	
V20021	S.S. Handle Washer	1	
V20200	Repair Kit	1	

REPLACEMENT PARTS VA100			
PART NO	DESCRIPTION	QTY	PRICE EA
V07151A	Stem	1	
V10153A	Handle	1	
V07254	Body	1	
V07155*	Ball	1	
V07256	1" End Plate	2	
V07258A*	Ball Seat	2	
V07264*	FKM (viton type) Body O-RIng	2	
V07159*	Upper Stem Bushing	1	
V07060*	Thrust Washer	1	
V07163*	FKM (viton type) Stem O-Ring	1	
V07017	¼" x 4½" SS Bolt	4	
V07018	¼" SS Lock Washer	4	
V07019	¼" SS Body Nut	4	
V10020A	#10 x 1¼" SS Handle Bolt	1	
V07021A	S.S. Handle Washer	1	
V10161	1" Poly Nozzle Pipe	1	
V07200	Repair Kit	1	

***Valve repair kits contain items marked with asterisk :**

1 Ball 2 Body O-Rings 1 Thrust Washer
2 Ball Seats 1 Upper Stem Bushing 1 Stem O-Ring

REPLACEMENT PARTS VA200FP			
PART NO	DESCRIPTION	QTY	PRICE EA
V25151B	Stem	1	
V25152	Red Angle Handle	1	
V25254	Body	1	
V25255A*	Ball	1	
V25256	2" FPT End Plate	2	
V25261	2" FP Angle End Flange	1	
V25258A*	Ball Seat	2	
V25264*	FKM (viton type) Body O-RIng	2	
V25160*	Upper Stem Bushing	1	
V25060*	Thrust Washer	1	
V25163*	FKM (viton type) Stem O-Ring	1	
V25017	⅜" x 4½" SS Bolt	6	
V20018	⅜" SS Lock Washer	6	
V20019	⅜" 16 SS Hex Nut	6	
V25020	⅜" x ½" Handle Bolt	1	
V25121	S.S. Handle Washer	1	
V25165	2" x 8" Nozzle Pipe	1	
V25200	Repair Kit	1	

REPLACEMENT PARTS UVA100FP			
PART NO	DESCRIPTION	QTY	PRICE EA
UV10150	1" Union End Cap	1	
UV10151	1" Union Stem	1	
UV10153	1" Union Handle	1	
UV10163	1" Union Stem EPDM O-Ring	2	
UV10254	1" Union Valve Body	1	
UV10255	1" Union Valve Seat	1	
UV10256	1" Union End Plate	1	
UV10258	1" Union Valve Seat	2	
UV10264	1" Union Body EPDM O-Ring	1	
V10161	1" Poly Nozzle Pipe	1	

REPLACEMENT PARTS VN100			
PART NO	DESCRIPTION	QTY	PRICE EA
VN10253	1" Valve Nozzle Handle	1	
VN10254	1" Valve Nozzle Body	1	
VN10263*	1" Valve Nozzle Stem O-Ring	2	
VN10264*	1" Valve Nozzle Body O-Ring	1	
VN10265*	Snap Ring for Valve Nozzle	1	
VN10269	1" Valve Nozzle Plug	1	
VN10270*	1" Valve Nozzle Poppet	1	
VN10271*	1" Valve Nozzle Gasket	1	
VN10273	1" Valve Nozzle Pin	1	
VN10274*	1" Valve Nozzle Spring	1	
VN10200	Repair Kit (Includes asterisk * items)	1	

Single Union Polypropylene Ball Valve

FEATURES

- Precision molded in glass reinforced polypropylene, for strength and chemical resistance.
- PTFE seats for smooth operation and proper sealing characteristics.
- EPDM O-rings to handle most fertilizers and many chemicals.
- Double O-rings in stem area for extra sealing protection.
- Interlocking body and end plate to allow easy thread connection when installing valves.
- Maximum operating pressure 100 P.S.I. at 70°F.

SINGLE UNION SPINWELD POLY VALVES						
PART NO	DESCRIPTION	MAX PSI	PIPE SIZE	OPENING THRU BALL	QTY	PRICE EA
SUV050FP	½" Full Port Union Valve	100	½"	½"	1	
SUV075FP	¾" Full Port Union Valve	100	¾"	¾"	1	
SUV100FP	1" Full Port Union Valve	100	1"	1"	1	
SUV125FP	1¼" Full Port Union Valve	100	1¼"	1¼"	1	
SUV150FP	1½" Full Port Union Valve	100	1½"	1½"	1	
SUV200FP	2" Full Port Union Valve	100	2"	2"	1	

MANIFOLD SINGLE UNION POLY VALVE						
PART NO	DESCRIPTION	MAX PSI	PIPE SIZE	OPENING THRU BALL	QTY	PRICE EA
MSUV100FP	1" Manifold Full Port Union Valve	100	1"	1"	1	

Single Union Polypropylene Ball Valve

FEATURES

- Precision molded in glass reinforced polypropylene, for strength and chemical resistance.
- PTFE seats for smooth operation and proper sealing characteristics.
- Double O-rings in stem area for extra sealing protection.
- Interlocking body and end plate to allow easy thread connection when installing.
- Maximum operating pressure 100 P.S.I. at 70°F.

SINGLE UNION POLY VALVES							
PART NO	DESCRIPTION	STEM O-RING	MAX PSI	PIPE SIZE	OPENING THRU BALL	QTY	PRICE EA
UV050FP	½" Single Union Poly Valve	EPDM	100	½"	¾"	1	
UV075FP	¾" Single Union Poly Valve	EPDM	100	¾"	¾"	1	
UV100FP	1" Single Union Poly Valve	EPDM	100	1"	1"	1	
UV125FP	1¼" Single Union Poly Valve	EPDM	100	1¼"	1½"	1	
UV150FP	1½" Single Union Poly Valve	EPDM	100	1½"	1½"	1	
UV200FP	2" Single Union Poly Valve	EPDM	100	2"	2"	1	

SPINWELD POLY VALVES							
PART NO	DESCRIPTION	STEM O-RING	MAX PSI	PIPE SIZE	OPENING THRU BALL	QTY	PRICE EA
WSFMT200	2" Male Adapter x 2" Male NPT Standard Port	FKM (viton type)	150	2"	1½"	1	
WSFMT200FP	2" Male Adapter x 2" Male NPT Full Port	FKM (viton type)	150	2"	2"	1	

Poly Air Actuated Shutoff Valves

FEATURES

- Open position allows full, unobstructed flow, 50-60 GPM.
- Air pressure collapses the internal rubber sleeve to provide positive shut off.
- Standard EPDM rubber bladder seal, FKM (viton type) available.
- Female NPT Threads.
- Maximum air pressure 100 P.S.I.

POLY PINCH VALVES							
PART NO	DESCRIPTION	GASKET	MAX PSI	PIPE SIZE	PRESSURE DIFFERENCE	QTY	PRICE EA
PV075	¾" x ¾" Poly Pinch Valve	EPDM	70	¾"	15 to 20 PSI	1	
PV075V	¾" Poly Pinch Valve	FKM (viton type)	70	¾"	15 to 20 PSI	1	
PV100	1" x 1" Poly Pinch Valve	EPDM	70	1"	15 to 20 PSI	1	
PV100V	1" x 1" Poly Pinch Valve	FKM (viton type)	70	1"	15 to 20 PSI	1	
PV100-075	1" x ¾" Poly Pinch Valve	EPDM	70	1"x ¾"	15 to 20 PSI	1	
PV100-075V	1" x ¾" Poly Pinch Valve	FKM (viton type)	70	1"x ¾"	15 to 20 PSI	1	
PV100-075B	1" x ¾" Poly Pinch Valve Female Coupler	EPDM	70	1"x ¾"	15 to 20 PSI	1	
PV100-075BV	1" x ¾" Female Coupler Poly Pinch Valve	FKM (viton type)	70	1"x ¾"	15 to 20 PSI	1	

Attention: The polypropylene air actuated valve is normally an open valve, and has a maximum liquid pressure of 70 P.S.I.

The pressure differential (pressure it takes to close valve) of the valve is 15 to 20 P.S.I.

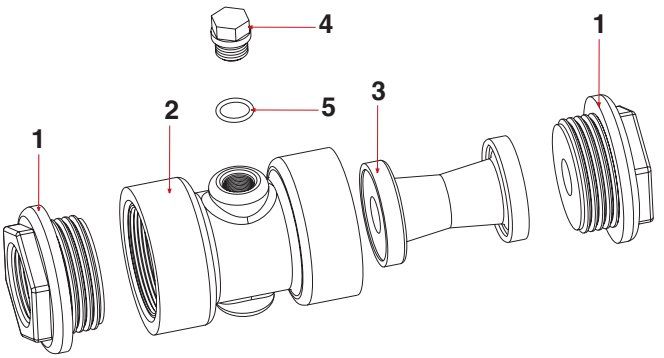

REPLACEMENT PARTS PV075 - PV100 - PV100-075 - PV100-075B PV100V - PV100-075V - PV100-075BV				
ITEM	PART NO	DESCRIPTION	QTY	PRICE EA
2	PV10254	Body	1	
4	12723	¼" Drain Plug	1	
5	12724	EPDM O-Ring for Drain Plug	1	

REPLACEMENT PARTS PV075				
ITEM	PART NO	DESCRIPTION	QTY	PRICE EA
1	PV07257	¾" End Plate	2	
3	PV10265	EPDM Rubber Bladder Seal	1	

REPLACEMENT PARTS PV075V				
ITEM	PART NO	DESCRIPTION	QTY	PRICE EA
1	PV07257	¾" End Plate	2	
3	PV10265V	FKM (viton type) Rubber Bladder Seal	1	

REPLACEMENT PARTS PV100 - PV100-075				
ITEM	PART NO	DESCRIPTION	QTY	PRICE EA
1	PV07256	1" End Plate	2	
1	PV07257	¾" End Plate (1 only)	1	
3	PV10265	EPDM Rubber Bladder Seal	1	

REPLACEMENT PARTS PV100V - PV100-075V				
ITEM	PART NO	DESCRIPTION	QTY	PRICE EA
1	PV07256	1" End Plate	2	
1	PV07257	¾" End Plate (1 only)	1	
3	PV10265V	FKM (viton type) Rubber Bladder Seal	1	

REPLACEMENT PARTS PV100-075B				
ITEM	PART NO	DESCRIPTION	QTY	PRICE EA
1	PV07256	1" End Plate	2	
1	PV07257B	¾" Pinch Valve Female Coupler End	1	
3	PV10265	EPDM Rubber Bladder Seal	1	

REPLACEMENT PARTS PV100-075BV				
ITEM	PART NO	DESCRIPTION	QTY	PRICE EA
1	PV07256	1" End Plate	1	
1	PV07257B	¾" Pinch Valve Female Coupler End	1	
3	PV10265V	FKM (viton type) Rubber Bladder Seal	1	

Polypropylene Check Valve

FEATURES

- One piece construction.
- 150 P.S.I. maximum.
- 1-2 P.S.I. spring.
- Glass reinforced polypropylene.
- 316 stainless steel springs.
- EPDM gasket.

MINI CHECK VALVE					
PART NO	DESCRIPTION	MAX PSI	PIPE SIZE	QTY	PRICE EA
CV100MT	1" Male x Female NPT	150	1"	1	

CHECK VALVE					
PART NO	DESCRIPTION	MAX PSI	PIPE SIZE	QTY	PRICE EA
CV221	2" Full Port Check Valve	150	2"	1	
CV300	3" Full Port Check Valve	150	3"	1	

See flange clamps and gaskets on page 81.
See page 78 for our manifold version.

316 Stainless Steel Two Piece Ball Valves

FEATURES

- 316 stainless steel.
- Blow out proof stem.
- All valves 100% tested by air, underwater at 100 P.S.I. in open and closed positions.
- Latch locking handle performs in both open and closed positions.
- Mounting pad.
- PTFE seals and seats.
- All full port design.
- Valves rated at 1,000 P.S.I.

316 SS FULL PORT BALL VALVES							
PART NO	DESCRIPTION	HANDLE TYPE	MAX PSI	PIPE SIZE	OPENING THRU BALL	QTY	PRICE EA
VSS025	¼" SS Full Port Ball Valve	Straight	1000	¼"	¼"	1	
VSS038	⅜" SS Full Port Ball Valve	Straight	1000	⅜"	⅜"	1	
VSS050	½" SS Full Port Ball Valve	Straight	1000	½"	½"	1	
VSS075	¾" SS Full Port Ball Valve	Straight	1000	¾"	¾"	1	
VSS100	1" SS Full Port Ball Valve	Straight	1000	1"	1"	1	
VSS125	1¼" SS Full Port Ball Valve	Straight	1000	1¼"	1¼"	1	
VSS150	1½" SS Full Port Ball Valve	Straight	1000	1½"	1½"	1	
VSS200	2" SS Full Port Ball Valve	Straight	1000	2"	2"	1	
VSS300	3" SS Full Port Ball Valve	Straight	1000	3"	3"	1	

REPLACEMENT PARTS HANDLES			
PART NO	DESCRIPTION	QTY	PRICE EA
VSS05153	Handle for VSS025, VSS038 & VSS050	1	
VSS07153	Handle for VSS075	1	
VSS10153	Handle for VSS100 & VSS125	1	
VSS15153	Handle for VSS150	1	
VSS20153	Handle for VSS200	1	
VSS35153	Handle for VSS300	1	

REPLACEMENT PARTS			
PART NO	DESCRIPTION	QTY	PRICE EA
VSS02500	¼" & ⅜" Repair Kit (Includes all PTFE seals & seats)	1	
VSS05200	½" Repair Kit (Includes all PTFE seals & seats)	1	
VSS07200	¾" Repair Kit (Includes all PTFE seals & seats)	1	
VSS10200	1" Repair Kit (Includes all PTFE seals & seats)	1	
VSS12500	1¼" Repair Kit (Includes all PTFE seals & seats)	1	
VSS15200	1½" Repair Kit (Includes all PTFE seals & seats)	1	
VSS25200	2" Repair Kit (Includes all PTFE seals & seats)	1	
VSS35200	3" Repair Kit (Includes all PTFE seals & seats)	1	

Stainless Steel Ball & Stem

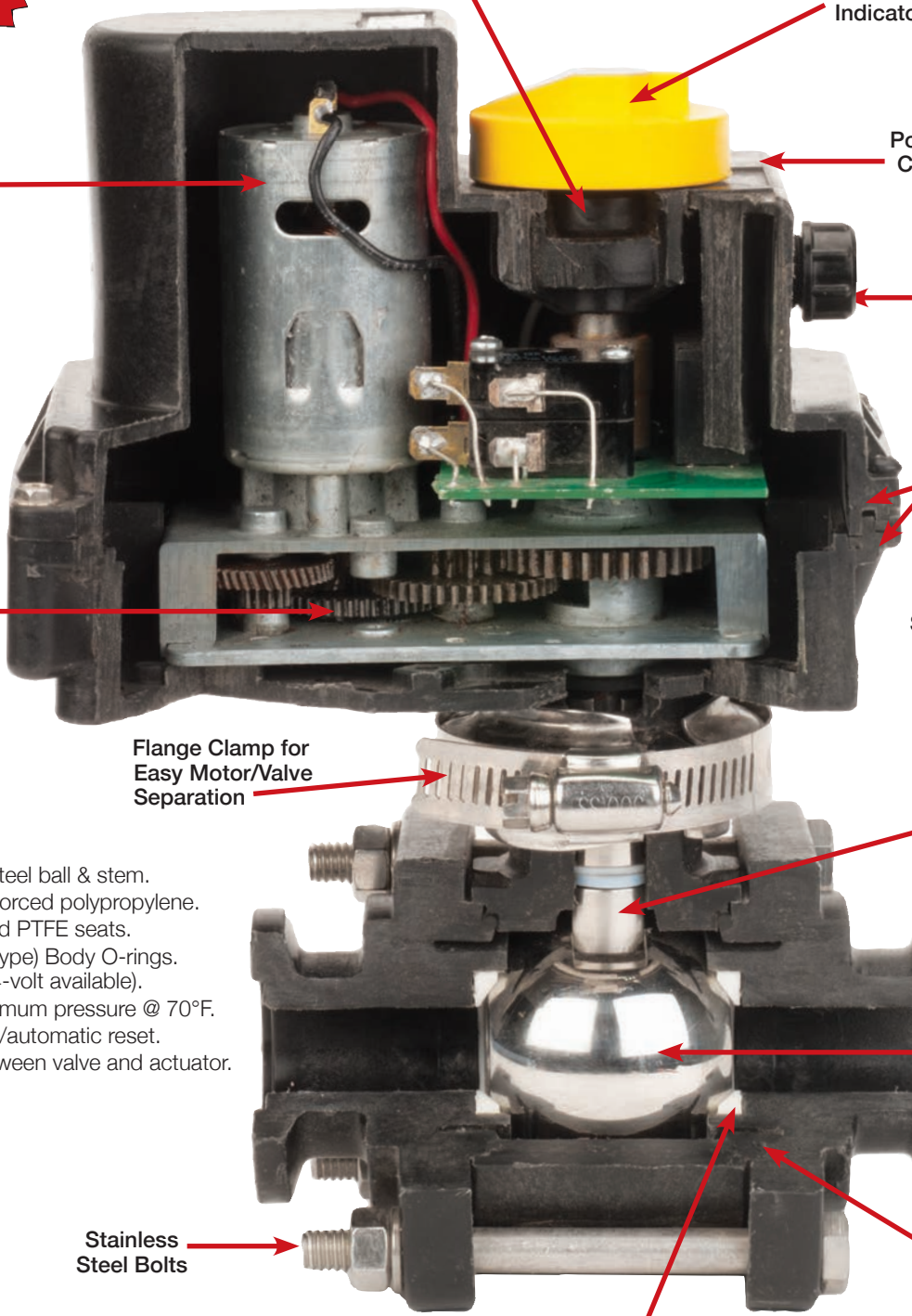

FEATURES

- 316 stainless steel ball & stem.
- Fiberglass reinforced polypropylene.
- Glass reinforced PTFE seats.
- All FKM (viton type) Body O-rings.
- 12-volt DC, (24-volt available).
- 150 P.S.I. maximum pressure @ 70°F.
- Internally fused/automatic reset.
- Weep hole between valve and actuator.

LEV Series Electric Valves
¼", ⅜" & ½"

FEATURES

- 12 Volt DC
- Stationary current draw: less than 0.04 amps.
- Rotating current draw: less than 0.40 amps.
- Stall current: 0.75 amps
- Response time: 1/3 sec open to close
- TFM seats
- EPDM seals
- Fiberglass reinforced polypropylene.
- Integrated mounting slot
- Standard 3 wire configuration.
- Max Pressure = 200 PSI @ 70 °F.

1/3 Second Response Time

⅜"-½" ON/OFF ELECTRIC VALVES						
PART NO	DESCRIPTION	MAX PSI	PIPE SIZE	OPENING THRU BALL	QTY	PRICE EA
LEV038	⅜" Full Port Electric Valve	200	⅜"	1"	1	
LEV050	½" Electric Valve	200	15/32"	1"	1	

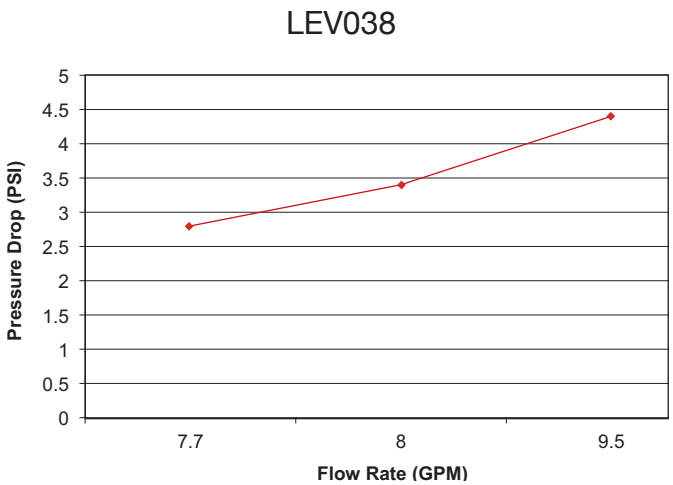

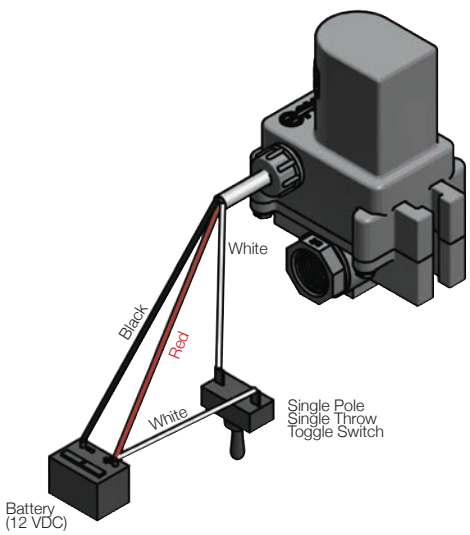

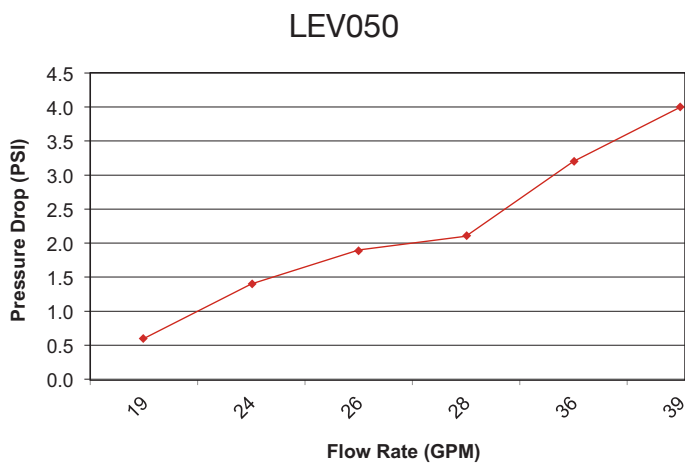

FEATURES

- 12 Volt DC
- Stationary current draw: less than 0.04 amps.
- Rotating current draw: less than 0.40 amps.
- Stall current: 0.75 amps
- Response time: 1/3 sec open to close
- TFM seats
- EPDM seals
- Fiberglass reinforced polypropylene.
- Integrated mounting slot
- Standard 3 wire configuration.
- Max Pressure = 150 PSI @ 70 °F.

John Guest® Fitting

The brand "**John Guest**" is a registered trademark of John Guest International Limited.

LEV SERIES ELECTRIC PUSH LOCK VALVES						
PART NO	DESCRIPTION	MAX PSI	PIPE SIZE	OPENING THRU BALL	QTY	PRICE EA
LEV025PL	¼" Electric Valve	150	¼"	3/8"	1	
LEV038PL	3/8" Full Port Electric Valve	150	3/8"	3/8"	1	
LEV050PL	½" Electric Valve	150	½"	15/32"	1	

LEV SERIES ELECTRIC PUSH LOCK VALVES						
PART NO	DESCRIPTION	MAX PSI	PIPE SIZE	OPENING THRU BALL	QTY	PRICE EA
LEV025PLST	¼" Electric Valve	150	¼"	3/8"	1	
LEV038PLST	3/8" Full Port Electric Valve	150	3/8"	3/8"	1	

Electric Valves
¾," 1," 1¼" Threaded

FEATURES

- 316 stainless steel ball & stem.
- Stainless steel hardware.
- Fiberglass reinforced polypropylene.
- Glass reinforced PTFE seats.
- FKM (viton type) or EPDM O-rings.
- 12-volt DC operated.
- 24-volt available in most models.
- 150 P.S.I. maximum pressure @ 70°F.
- Easily repairable.
- Open/closed indicator.

¾ Second Response Time

¾"-1¼" ON/OFF ELECTRIC VALVES						
PART NO	DESCRIPTION	MAX PSI	PIPE SIZE	OPENING THRU BALL	QTY	PRICE EA
EV075	¾" Full Port Electric Valve	150	¾"	1"	1	
EV100FP	1" Full Port Electric Valve	150	1"	1"	1	
EV125	1¼" Electric Valve	150	1¼"	1"	1	

On/Off
Wiring Diagram

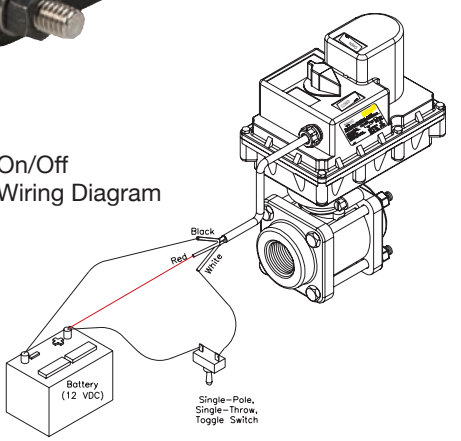

4 Second Response Time

¾"-1¼" REGULATING ELECTRIC VALVES						
PART NO	DESCRIPTION	MAX PSI	PIPE SIZE	OPENING THRU BALL	QTY	PRICE EA
EVR075	¾" Full Port Electric Valve	150	¾"	1"	1	
EVR100FP	1" Full Port Electric Valve	150	1"	1"	1	
EVR125	1¼" Electric Valve	150	1¼"	1"	1	

Regulating Wiring
Diagram

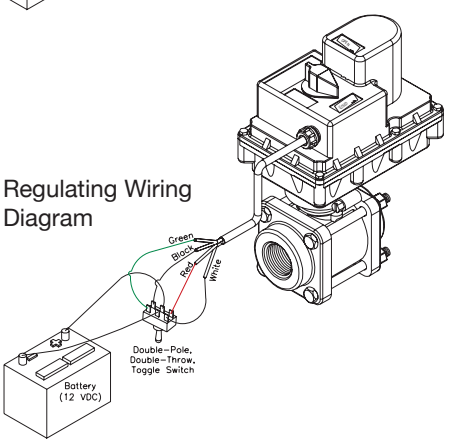

Note: 2 wire regulating and other response times available.
Contact our Sales Team for part number and availability of valves.

Fast repair replacement options.

Assembly Specs:
Body bolt tightening torque: 75 in-lb
Max stem turning torque: 75 in-lb

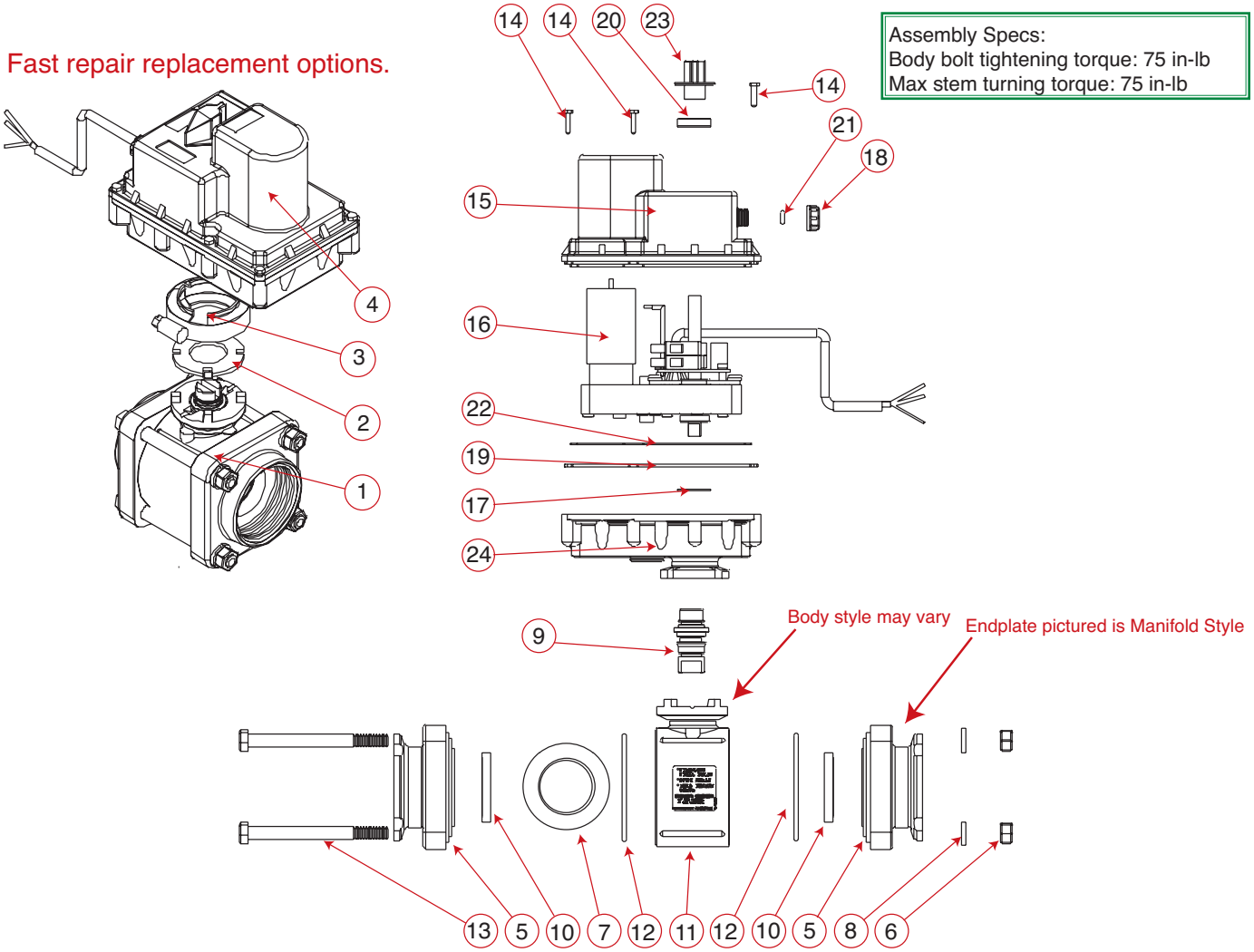

REPLACEMENT PARTS EV075-EVR075-EV100FP-EVR100FP-EV125-EVR125				
ITEM	PART NO	DESCRIPTION	QTY	PRICE EA
1	EV075XR1	¾" Electric Valve Sub Assembly	1	
1	EV100XR1	1" Electric Valve Sub Assembly	1	
1	EV125XR1	1¼" Electric Valve Sub Assembly	1	
2	MVE004	Electric Valve Flange Gasket	1	
3	FC100	1" Flange Clamp	1	
4	EV3100	¾ Second 3 Wire Motor Assembly	1	
4	EVR3100	Regulating 4 Wire, 4 Second	1	
4	EVR3102	Regulating 2 Wire, 8 Second	1	
5	VE07357A	¾" Threaded End Plate	2	
5	VE10257A	1" Threaded End Plate	2	
5	VE10256A	1¼" Threaded End Plate	2	
6	V10119	5/16" SS Body Nut	4	
7	VE10155SSH	1" 316 SS Hollow Ball	1	
8	V10118	5/16" SS Lock Washer	4	
9	MEV10151	1" SS Stem w/Seals	1	
10	VE10258A	1" Electric Ball Seat	2	
11	MEV10254A	1" Body	1	

REPLACEMENT PARTS EV075-EVR075-EV100FP-EVR100FP-EV125-EVR125				
ITEM	PART NO	DESCRIPTION	QTY	PRICE EA
12	VE10264	1" FKM (viton type) Body O-Ring	2	
13	V10117	5/16" x 3½" SS Body Bolt	4	
14	VE15220	Housing Screw	6	
15	MEV10102A	Housing Top for Small Motor	1	
16	VE4984	¾ Second 3 Wire On/Off Motor	1	
16	VE4983	4 Second 4 Wire Regulating Motor	1	
17	MVE105	Motor Shaft Gasket	1	
18	MVE002	Heyco ¼" Threaded Bushing	1	
19	MVE104	Outer Housing Gasket	1	
20	VE109E	Indicator Seal	1	
21	MVE007	3mm x 5mm FKM (viton type) O-Ring	1	
22	MVE106	Inner Housing Gasket	1	
23	VE107B	Flow Indicator	1	
24	MEV10101	Housing Bottom for Small Motor	1	
25	EV10210	Repair Kit (Includes items 2, 9, 10, 12)	1	

Electric Valves
1½," 2" Threaded

FEATURES

- 316 stainless steel ball & stem.
- Stainless steel hardware.
- Fiberglass reinforced polypropylene.
- Glass reinforced PTFE seats.
- FKM (viton type) or EPDM O-rings.
- 12-volt DC operated.
- 24-volt available in most models.
- 150 P.S.I. maximum pressure @ 70°F.
- Easily repairable.
- Open/closed indicator.

ON/OFF Electric Valves - 1¼ Second Response Time

1½"-2" ON/OFF ELECTRIC VALVES						
PART NO	DESCRIPTION	MAX PSI	PIPE SIZE	OPENING THRU BALL	QTY	PRICE EA
EV150	1½" Electric Valve	150	1½"	1½"	1	
EV200	2" Electric Valve	150	2"	1½"	1	

On/Off
Wiring Diagram

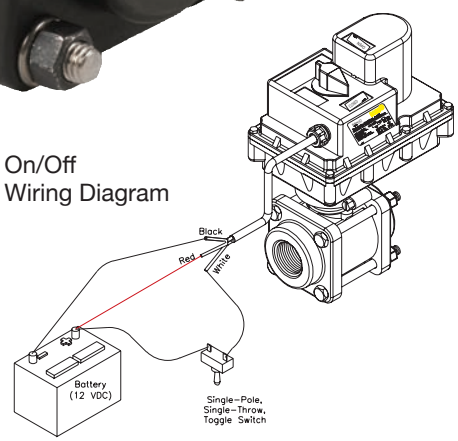

REGULATING Electric Valves - 4 Second Response Time

1½"-2" REGULATING ELECTRIC VALVES						
PART NO	DESCRIPTION	MAX PSI	PIPE SIZE	OPENING THRU BALL	QTY	PRICE EA
EVR150	1½" Electric Valve	150	1½"	1½"	1	
EVR200	2" Electric Valve	150	2"	1½"	1	

Regulating Wiring
Diagram

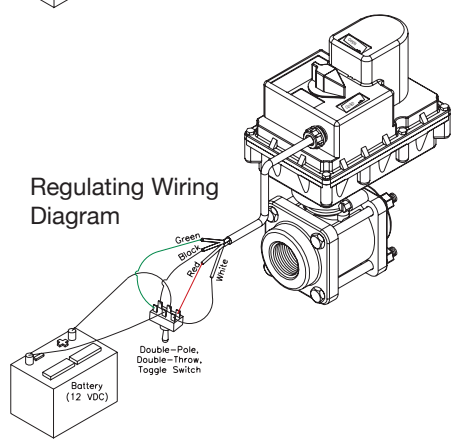

Note: 2 wire regulating and other response times available.
Contact our Sales Team for part number and availability of valves.

Fast repair replacement options.

Assembly Specs:
Body bolt tightening torque: 75 in-lb
Max stem turning torque: 75 in-lb

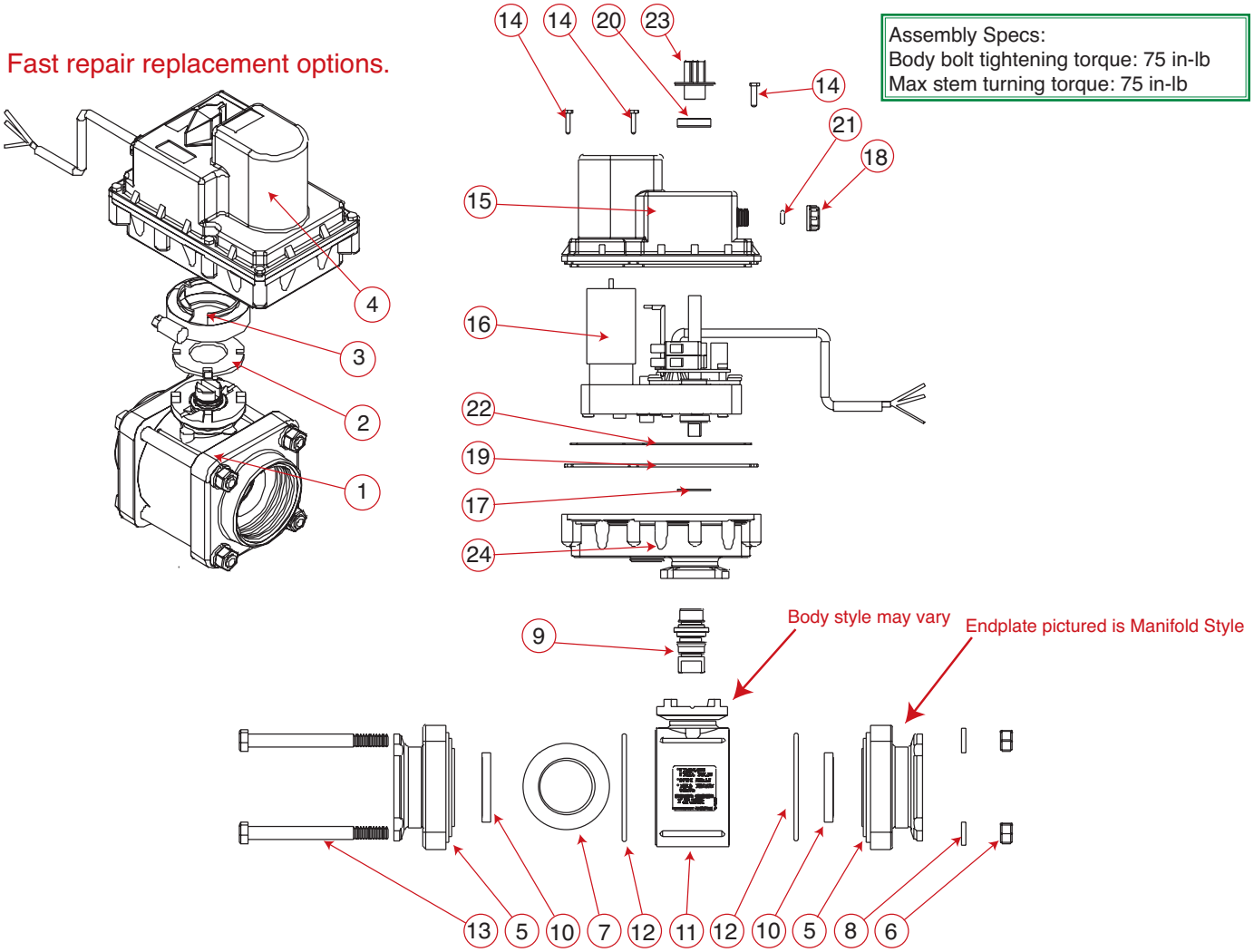

REPLACEMENT PARTS EV150-EV200-EVR150-EVR200				
ITEM	PART NO	DESCRIPTION	QTY	PRICE EA
1	EV150XR1	1½" Full Port Electric Valve Sub Assembly	1	
1	EV200XR1	2" Electric Valve Sub Assembly	1	
2	MVE004	Electric Valve Flange Gasket	1	
3	FC100	1" Flange Clamp	1	
4	EV4100	1¼ Second 3 Wire Motor Assembly	1	
4	EVR4100	Regulating 4 Wire, 4 Second	1	
4	EVR4102	Regulating 2 Wire, 6 Second	1	
5	VE20257A	1½" Threaded End Plate	2	
5	VE20256A	2" Threaded End Plate	2	
6	V20019	⅜" 16 SS Hex Nut	4	
7	VE20255SSH	2" 316 SS Hollow Ball	1	
8	V20018	⅜" SS Lock Washer	4	
9	MEV10151	1" SS Stem w/Seals	1	
10	VE20258A	1½" & 2" Electric Ball Seat	2	
11	MEV20254A	1½" & 2" Body	1	
12	VE20264	2" FKM (viton type) Body O-Ring	2	

REPLACEMENT PARTS EV150-EV200-EVR150-EVR200				
ITEM	PART NO	DESCRIPTION	QTY	PRICE EA
13	V20017	⅜" x 4" SS Body Bolt	4	
14	VE15220	Housing Screw	6	
15	MEV25102A	Housing Top for Large Motor	1	
16	VE4987	1¼ Second Hi Torque On/Off Motor	1	
16	VE4988	4 Second 12 Volt Wire Regulating Motor	1	
17	MVE107	Motor Shaft Gasket	1	
18	MVE002	Heyco ¼" Threaded Bushing	1	
19	MVE104	Outer Housing Gasket	1	
20	VE109E	Indicator Seal	1	
21	MVE007	3mm x 5mm FKM (viton type) O-Ring	1	
22	MVE106	Inner Housing Gasket	1	
23	VE107B	Flow Indicator	1	
24	MEV25101	Housing Bottom for Large Motor	1	
25	EV20210	Repair Kit (Includes items 2, 9, 10, 12)	1	

Electric Valves
2" Full Port Threaded

FEATURES

- 316 stainless steel ball & stem.
- Stainless steel hardware.
- Fiberglass reinforced polypropylene.
- Glass reinforced PTFE seats.
- FKM (viton type) or EPDM O-rings.
- 12-volt DC operated.
- 24-volt available in most models.
- 150 P.S.I. maximum pressure @ 70°F.
- Easily repairable.
- Open/closed indicator.

ON/OFF Electric Valves - 1¼ Second Response Time

2" FULL PORT ON/OFF ELECTRIC VALVES						
PART NO	DESCRIPTION	MAX PSI	PIPE SIZE	OPENING THRU BALL	QTY	PRICE EA
EV204FP	2" Full Port Electric Valve	150	2"	2"	1	

On/Off
Wiring Diagram

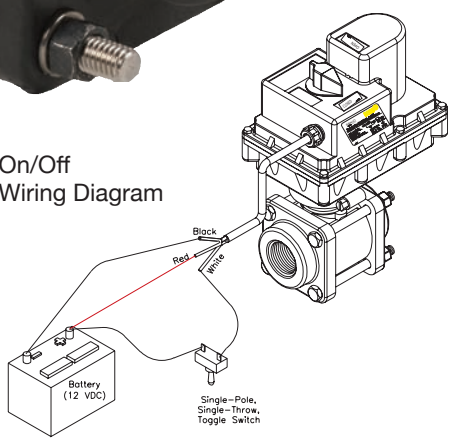

REGULATING Electric Valves - 4 Second Response Time

2" FULL PORT REGULATING ELECTRIC VALVES						
PART NO	DESCRIPTION	MAX PSI	PIPE SIZE	OPENING THRU BALL	QTY	PRICE EA
EVR204FP	2" Full Port Electric Valve	150	2"	2"	1	

Regulating Wiring
Diagram

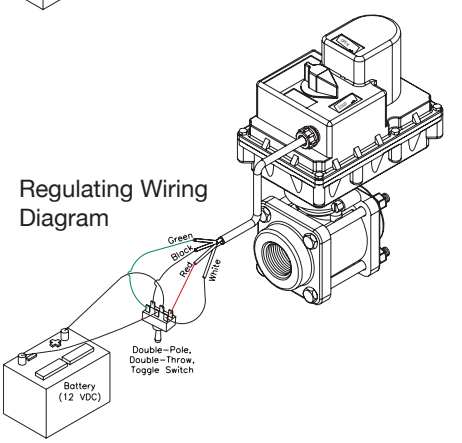

Note: 2 wire regulating and other response times available.
Contact our Sales Team for part number and availability of valves.

Fast repair replacement options.

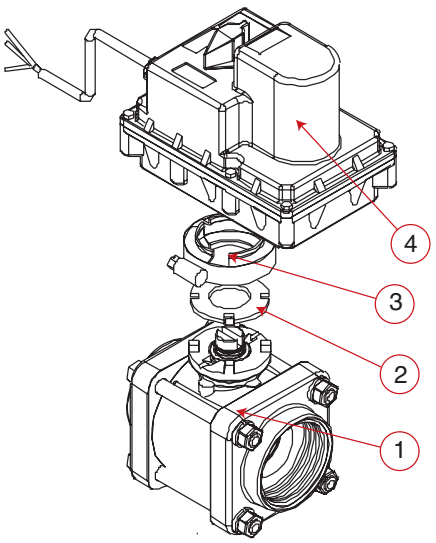

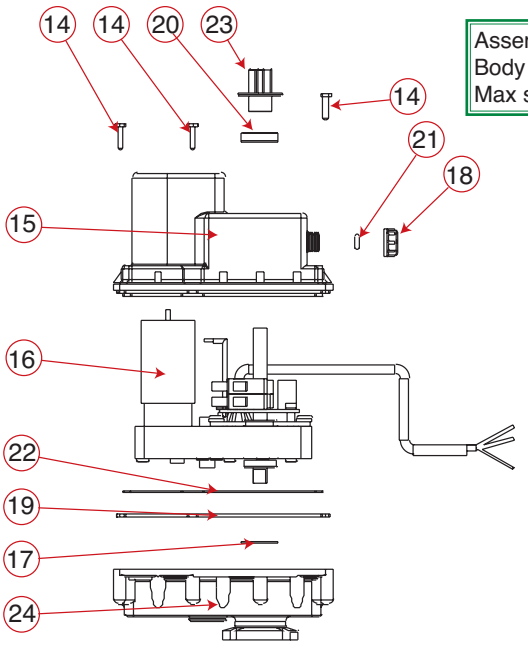

Assembly Specs:
Body bolt tightening torque: 75 in-lb
Max stem turning torque: 75 in-lb

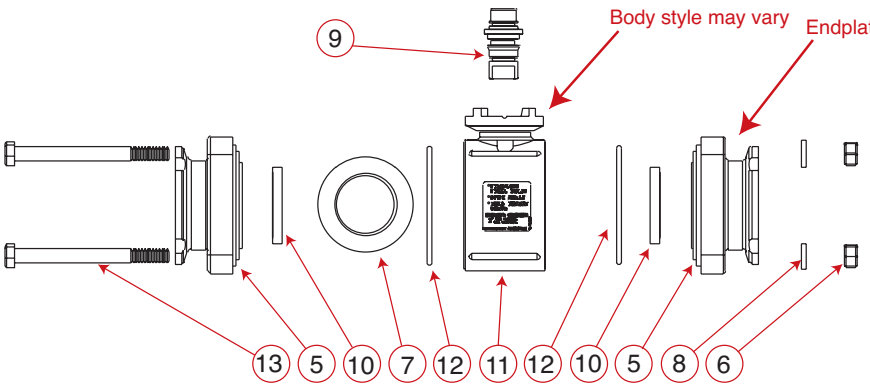

REPLACEMENT PARTS EV204FP-EVR204FP				
ITEM	PART NO	DESCRIPTION	QTY	PRICE EA
1	EV204XR1	2" Full Port Electric Valve Sub Assembly	1	
2	MVE004	Electric Valve Flange Gasket	1	
3	FC100	1" Flange Clamp	1	
4	EV4100	1¼ Second 3 Wire Motor Assembly	1	
4	EVR4100	Regulating 4 Wire, 4 Second	1	
4	EVR4102	Regulating 2 Wire, 6 Second	1	
5	VE25356A	2" Full Port Threaded End Plate	2	
6	V20019	⅜" 16 SS Hex Nut	4	
7	VE25255SSH	2" 316 SS Hollow Ball	1	
8	V20018	⅜" SS Lock Washer	4	
9	MEV25151	1" SS Stem w/Seals	1	
10	VE25258A	2" Full Port Electric Ball Seat	2	
11	MEV25254A	2" Full Port Body	1	
12	V25264	2" FKM (viton type) Body O-Ring	2	

REPLACEMENT PARTS EV204FP-EVR204FP				
ITEM	PART NO	DESCRIPTION	QTY	PRICE EA
13	V25017	⅜" x 4" SS Body Bolt	4	
14	VE15220	Housing Screw	6	
15	MEV25102A	Housing Top for Large Motor	1	
16	VE4987	1¼ Second Hi Torque On/Off Motor	1	
16	VE4988	4 Second 12 Volt Wire Regulating Motor	1	
17	MVE107	Motor Shaft Gasket	1	
18	MVE002	Heyco ¼" Threaded Bushing	1	
19	MVE104	Outer Housing Gasket	1	
20	VE109E	Indicator Seal	1	
21	MVE007	3mm x 5mm FKM (viton type) O-Ring	1	
22	MVE106	Inner Housing Gasket	1	
23	VE107B	Flow Indicator	1	
24	MEV25101	Housing Bottom for Large Motor	1	
25	EV25210	Repair Kit (Includes items 2, 9, 10, 12)	1	

Electric Valves
3" Full Port Threaded

FEATURES

- Stainless steel hardware.
- Fiberglass reinforced polypropylene.
- Glass reinforced PTFE seats.
- FKM (viton type) or EPDM O-rings.
- 12-volt DC operated.
- 100 P.S.I. maximum pressure @ 70°F.

ON/OFF Electric Valves - 3 Second Response Time 3 Wire

3" FULL PORT ON/OFF ELECTRIC VALVES						
PART NO	DESCRIPTION	MAX PSI	PIPE SIZE	OPENING THRU BALL	QTY	PRICE EA
EV300FP	3" Full Port Electric Valve	100	3"	3"	1	

Note:4 wire regulating & 110 Volt AC, 9 Seconds response times available. Contact our sales team for part number and availability of valves.

On/Off
Wiring Diagram

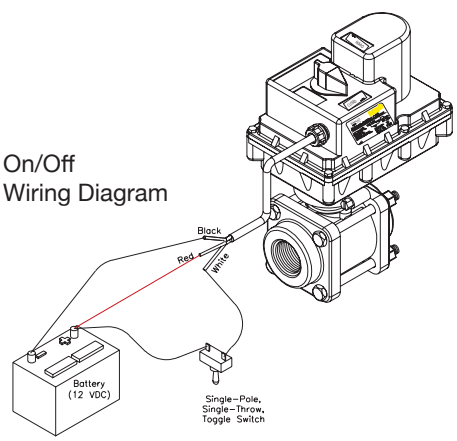

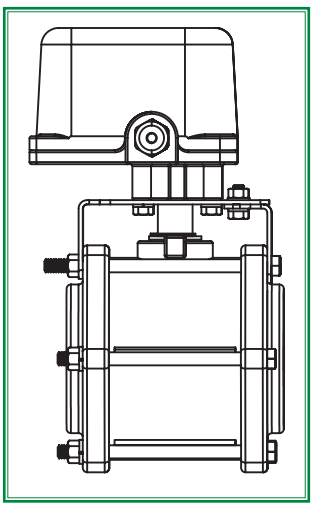

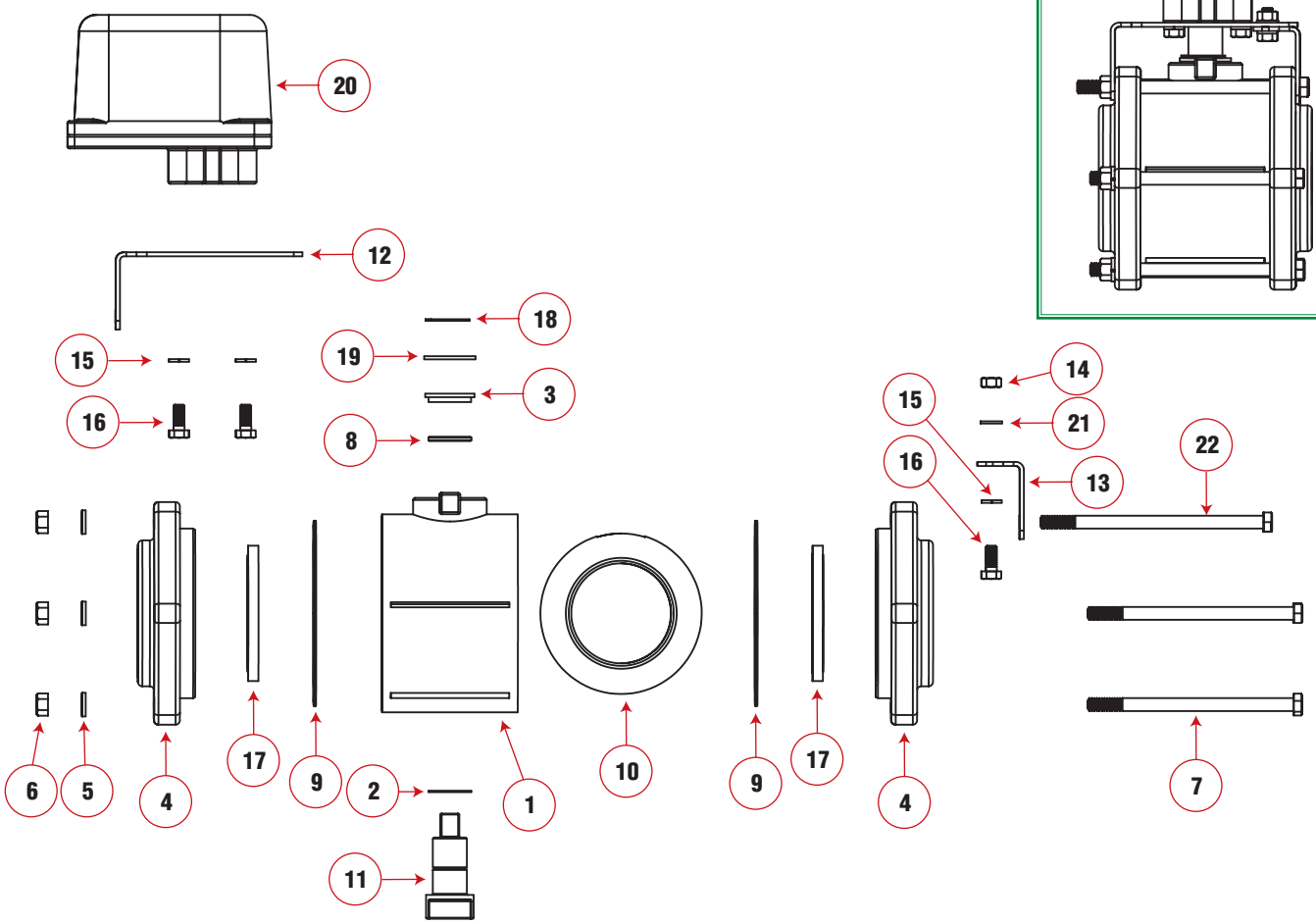

REPLACEMENT PARTS EV300FP				
ITEM	PART NO	DESCRIPTION	QTY	PRICE EA
1	V35254	3" Body	1	
2	V25060	Stem Shim	1	
3	V25160	Upper Stem Bushing	1	
4	V35264	3" Threaded End Plate	2	
5	V20018	3/8" SS Lock Washer	6	
6	V20019	3/8" 16 SS Hex Nut	6	
7	V35017	3/8" SS Bolt	4	
8	V25163	Stem O-Ring	1	
9	V35265	3" FKM (viton type) Body O-Ring	2	
10	V35255A	3" Electric Ball	1	
11	VE30151SS	SS Stem w/Out Seals	1	

REPLACEMENT PARTS EV300FP				
ITEM	PART NO	DESCRIPTION	QTY	PRICE EA
12	VE35188	Actuator Bracket-Large	1	
13	VE35189	Actuator Bracket-Small	1	
14	V10119	5/16" Hex Nut	2	
15	V10118	5/16" Lock Washer	6	
16	17019	Hex Bolt	6	
17	VE35258A	Ball Seat	2	
18	VE30022	1" Snap Ring	1	
19	VE30121	Stem Washer	1	
20	VE5630	3 Sec, 12VDC Motor	1	
21	12901	Washer	2	
22	V35018	3/8" SS Bolt	2	

3-Way Electric Valves
¾," 1," 1¼" Threaded w/Flanged Inlet

FEATURES

- 316 stainless steel ball & stem.
- Stainless steel hardware.
- Fiberglass reinforced polypropylene.
- Glass reinforced PTFE seats.
- FKM (viton type) or EPDM O-rings.
- 24-volt available in most models.
- 12-volt DC operated.
- 150 P.S.I. maximum pressure @ 70°F.
- Easily repairable.
- Open/closed indicator.

BOTTOM LOAD

Don't forget the manifold connections for inlets on pages 81-85.

Attention:
3-Way regulating valves are not shown, but are available.
Standard 3-Way valves use the On/Off wiring diagram.

¾ Second Response Time

¾"-1¼" BOTTOM LOAD ELECTRIC VALVES						
PART NO	DESCRIPTION	MAX PSI	PIPE SIZE	OPENING THRU BALL	QTY	PRICE EA
EV075BL	¾" Full Port Electric Valve	150	¾"	1"	1	
EV100BL	1" Electric Valve	150	1"	1"	1	
EV125BL	1¼" Electric Valve	150	1¼"	1"	1	

BOTTOM LOAD:
Directional flow right or left.
Valve flow cannot be turned off.

SIDE LOAD

¾ Second Response Time

¾"-1¼" SIDE LOAD ELECTRIC VALVES						
PART NO	DESCRIPTION	MAX PSI	PIPE SIZE	OPENING THRU BALL	QTY	PRICE EA
EV075SL	¾" Full Port Electric Valve	150	¾"	1"	1	
EV100SL	1" Electric Valve	150	1"	1"	1	
EV125SL	1¼" Electric Valve	150	1¼"	1"	1	

SIDE LOAD:
Directional flow right or left.
Valve flow cannot be turned off.

On/Off
Wiring Diagram

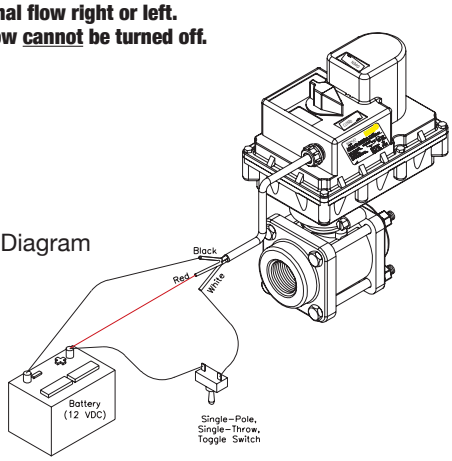

Regulating Wiring
Diagram

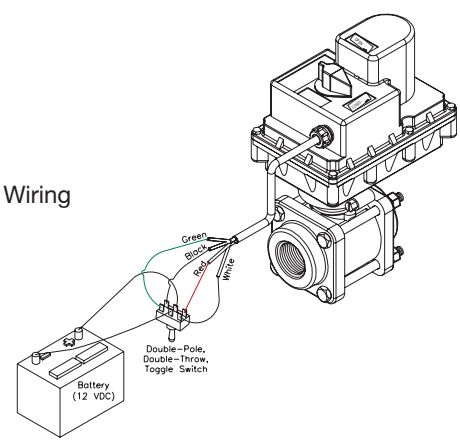

Fast repair replacement options.

Assembly Specs:
Body bolt tightening torque: 75 in-lb
Max stem turning torque: 75 in-lb

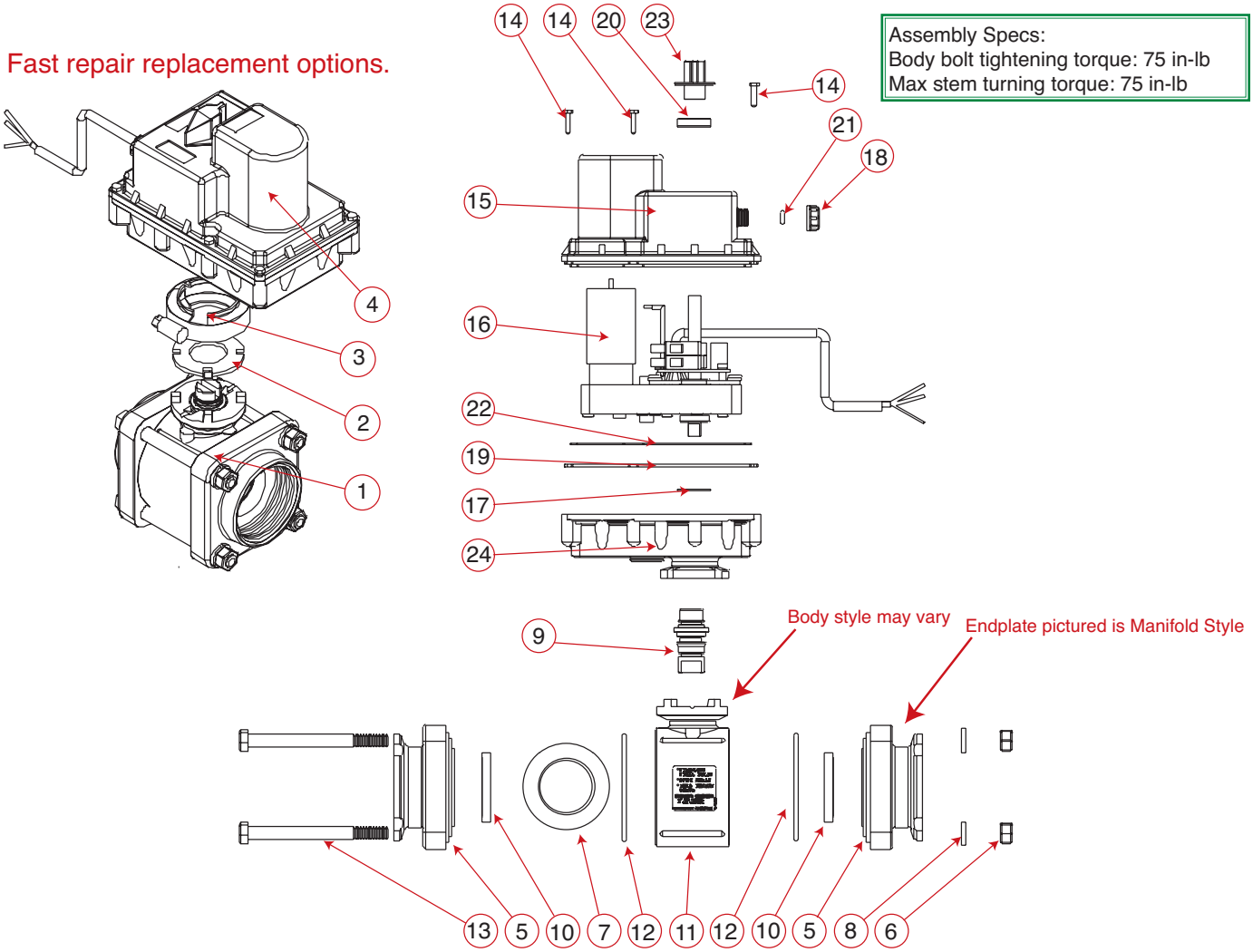

REPLACEMENT PARTS EV075SL-EV075BL-EV100SL-EV100BL-EV125SL-EV125BL				
ITEM	PART NO	DESCRIPTION	QTY	PRICE EA
1	EV075SLXR1	¾" Electric Valve Sub Assembly	1	
1	EV100SLXR1	1" Electric Valve Sub Assembly	1	
1	EV125SLXR1	1¼" Electric Valve Sub Assembly	1	
1	EV075BLXR1	¾" Electric Valve Sub Assembly	1	
1	EV100BLXR1	1" Electric Valve Sub Assembly	1	
1	EV125BLXR1	1¼" Electric Valve Sub Assembly	1	
2	MVE004	Electric Valve Flange Gasket	1	
3	FC100	1" Flange Clamp	1	
4	EV3100	¾ Second 3 Wire Motor Assembly	1	
4	EVR3100	Regulating 4 Wire, 4 Second	1	
5	VE07357A	¾" Threaded End Plate	2	
5	VE10257A	1" Threaded End Plate	2	
5	VE10256A	1¼" Threaded End Plate	2	
6	V10119	5/16" SS Body Nut	4	
7	VE10355	1" 316 SS Hollow Ball	1	
8	V10118	5/16" SS Lock Washer	4	
9	MEV10151	1" SS Stem w/Seals	1	
10	VE10258A	1" Electric Ball Seat	2	

REPLACEMENT PARTS EV075SL-EV075BL-EV100SL-EV100BL-EV125SL-EV125BL				
ITEM	PART NO	DESCRIPTION	QTY	PRICE EA
11	MEV10354AB	¾"-1¼" Bottom Load Body	1	
11	MEV10354AS	¾"-1¼" Side Load Body	1	
12	VE10264	FKM (viton type) Body O-Ring	2	
13	V10117	5/16" x 3½" SS Body Bolt	4	
14	VE15220	Housing Screw	6	
15	MEV10102A	Housing Top for Small Motor	1	
16	VE4984	¾ Second 3 Wire On/Off Motor	1	
17	MVE105	Motor Shaft Gasket	1	
18	MVE002	Heyco ¼" Threaded Bushing	1	
19	MVE104	Outer Housing Gasket	1	
20	VE109E	Indicator Seal	1	
21	MVE007	3mm x 5mm FKM (viton type) O-Ring	1	
22	MVE106	Inner Housing Gasket	1	
23	VE107B	Flow Indicator	1	
24	MEV10101	Housing Bottom for Small Motor	1	
25	EV10210	Repair Kit (Includes items 2, 9, 10, 12)	1	

3-Way Electric Valves
1½", 2" Threaded w/Flanged Inlet

FEATURES

- 316 stainless steel ball & stem.
- Stainless steel hardware.
- Fiberglass reinforced polypropylene.
- Glass reinforced PTFE seats.
- FKM (viton type) or EPDM O-rings.
- 12-volt DC operated.
- 24-volt available in most models.
- 150 P.S.I. maximum pressure @ 70°F.
- Easily repairable.
- Open/closed indicator.

Don't forget the manifold connections for inlets on pages 81-85.

Attention:
3-Way regulating valves are not shown, but are available.
Standard 3-Way valves use the On/Off wiring diagram.

BOTTOM LOAD

SIDE LOAD

1¼ SECOND RESPONSE TIME

1½"-2" BOTTOM LOAD ELECTRIC VALVES						
PART NO	DESCRIPTION	MAX PSI	PIPE SIZE	OPENING THRU BALL	QTY	PRICE EA
EV150BL	1½" Electric Valve	150	1½"	1½"	1	
EV200BL	2" Electric Valve	150	2"	1½"	1	

BOTTOM LOAD:
Directional flow right or left.
Valve flow cannot be turned off.

1¼ SECOND RESPONSE TIME

1½"-2" SIDE LOAD ELECTRIC VALVES						
PART NO	DESCRIPTION	MAX PSI	PIPE SIZE	OPENING THRU BALL	QTY	PRICE EA
EV150SL	1½" Electric Valve	150	1½"	1½"	1	
EV200SL	2" Electric Valve	150	2"	1½"	1	

SIDE LOAD:
Directional flow right or left.
Valve flow cannot be turned off.

On/Off
Wiring Diagram

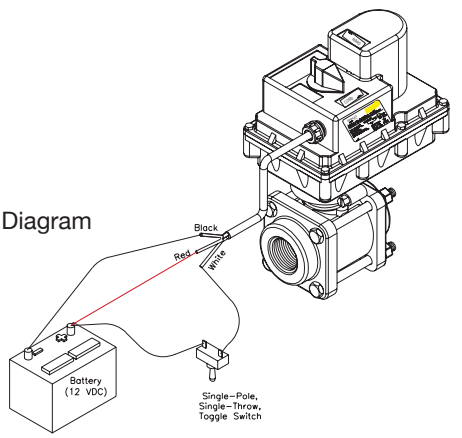

Regulating Wiring
Diagram

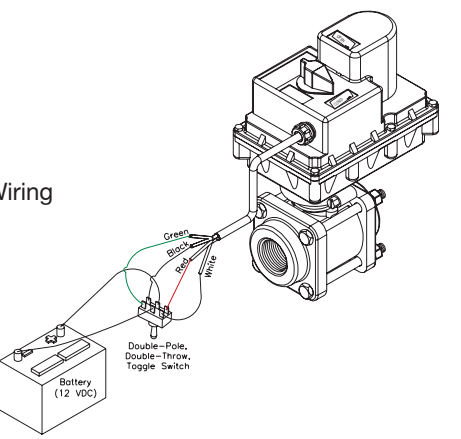

Fast repair replacement options.

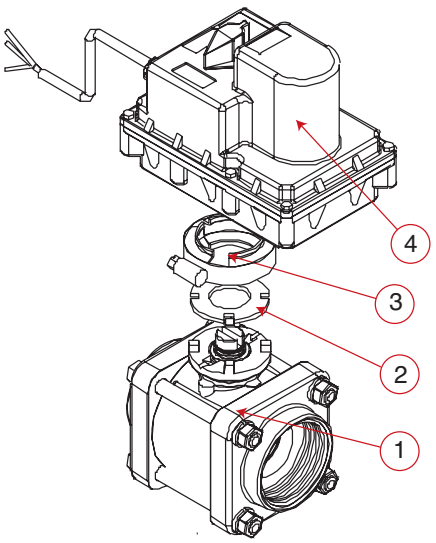

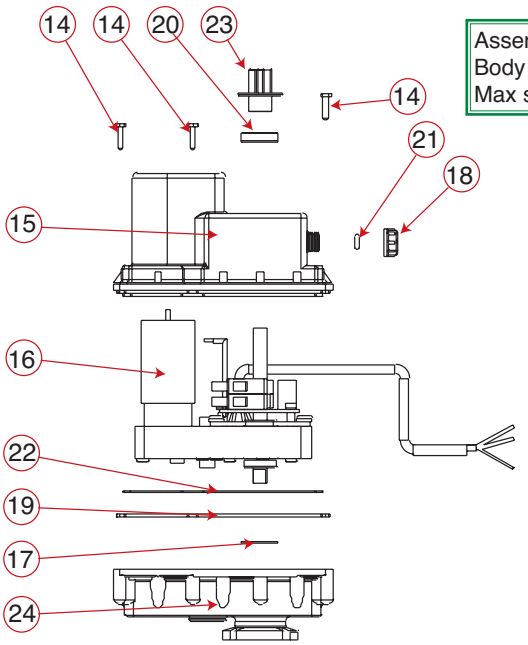

Assembly Specs:
Body bolt tightening torque: 75 in-lb
Max stem turning torque: 75 in-lb

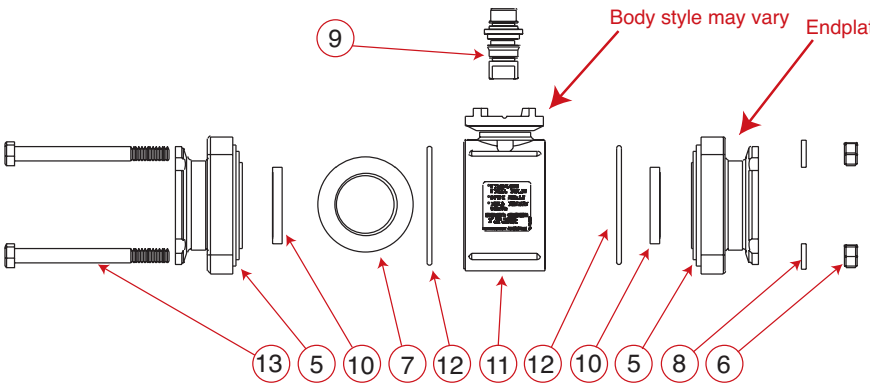

REPLACEMENT PARTS EV150SL-EV150BL-EV200SL-EV200BL				
ITEM	PART NO	DESCRIPTION	QTY	PRICE EA
1	EV150SLXR1	1½" Electric Valve Sub Assembly	1	
1	EV200SLXR1	2" Electric Valve Sub Assembly	1	
1	EV150BLXR1	1½" Electric Valve Sub Assembly	1	
1	EV200BLXR1	2" Electric Valve Sub Assembly	1	
2	MVE004	Electric Valve Flange Gasket	1	
3	FC100	1" Flange Clamp	1	
4	EV4100	1¼ Second 3 Wire Motor Assembly	1	
4	EVR4100	Regulating 4 Wire, 4 Second	1	
5	VE20257A	1½" Threaded End Plate	2	
5	VE20256A	2" Threaded End Plate	2	
6	V20019	⅜" 16 SS Hex Nut	4	
7	VE20355	2" 316 SS Hollow Ball	1	
8	V20018	⅜" SS Lock Washer	4	
9	MEV10151	1" SS Stem w/Seals	1	
10	VE20258A	1½" & 2" Electric Ball Seat	2	
11	MEV20354AB	1½" & 2" Bottom Load Body	1	
11	MEV20354AS	1½" & 2" Side Load Body	1	

REPLACEMENT PARTS EV150SL-EV150BL-EV200SL-EV200BL				
ITEM	PART NO	DESCRIPTION	QTY	PRICE EA
12	VE20264	2" FKM (viton type) Body O-Ring	2	
13	V20017	⅜" x 4" SS Body Bolt	4	
14	VE15220	Housing Screw	6	
15	MEV25102A	Housing Top for Large Motor	1	
16	VE4987	1¼" High Torque On/Off Motor	1	
17	MVE107	Motor Shaft Gasket	1	
18	MVE002	Heyco ¼" Threaded Bushing	1	
19	MVE104	Outer Housing Gasket	1	
20	VE109E	Indicator Seal	1	
21	MVE007	3mm x 5mm FKM (viton type) O-Ring	1	
22	MVE106	Inner Housing Gasket	1	
23	VE107B	Flow Indicator	1	
24	MEV25101	Housing Bottom for Large Motor	1	
25	EV20210	Repair Kit (Includes items 2, 9, 10, 12)	1	

3-Way Electric Valves
2" Full Port Threaded w/Flanged Inlet

FEATURES

- 316 stainless steel ball & stem.
- Stainless steel hardware.
- Fiberglass reinforced polypropylene.
- Glass reinforced PTFE seats.
- FKM (viton type) or EPDM O-rings.
- 12-volt DC operated.
- 24-volt available in most models.
- 150 P.S.I. maximum pressure @ 70°F.
- Easily repairable.
- Open/closed indicator.

Don't forget the manifold connections for inlets on pages 81-85.

Attention:
3-Way regulating valves are not shown, but are available.
Standard 3-Way valves use the On/Off wiring diagram.

BOTTOM LOAD

SIDE LOAD

1¼ SECOND RESPONSE TIME

2" FULL PORT BOTTOM LOAD ELECTRIC VALVES						
PART NO	DESCRIPTION	MAX PSI	PIPE SIZE	OPENING THRU BALL	QTY	PRICE EA
EV204BLFP	2" Full Port Electric Valve	150	2"	2"	1	

BOTTOM LOAD:
Directional flow right or left.
Valve flow cannot be turned off.

1¼ SECOND RESPONSE TIME

2" FULL PORT SIDE LOAD ELECTRIC VALVES						
PART NO	DESCRIPTION	MAX PSI	PIPE SIZE	OPENING THRU BALL	QTY	PRICE EA
EV204SLFP	2" Full Port Electric Valve	150	2"	2"	1	

SIDE LOAD:
Directional flow right or left.
Valve flow cannot be turned off.

On/Off
Wiring Diagram

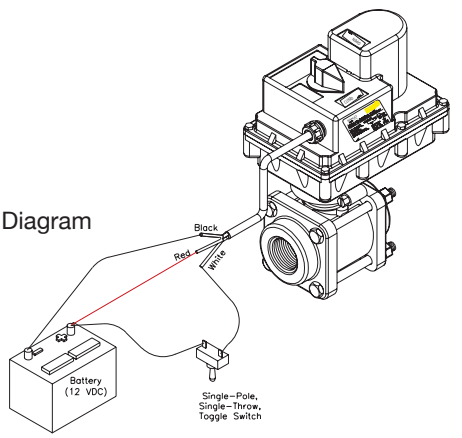

Regulating Wiring
Diagram

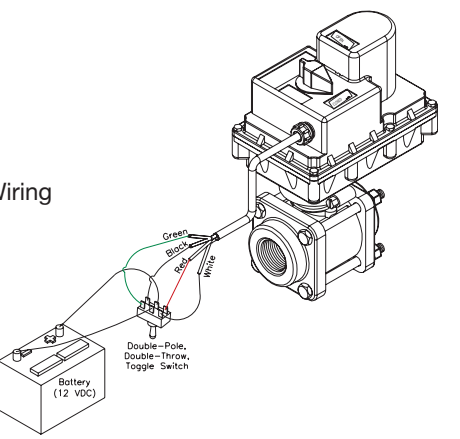

Fast repair replacement options.

Assembly Specs:
Body bolt tightening torque: 75 in-lb
Max stem turning torque: 75 in-lb

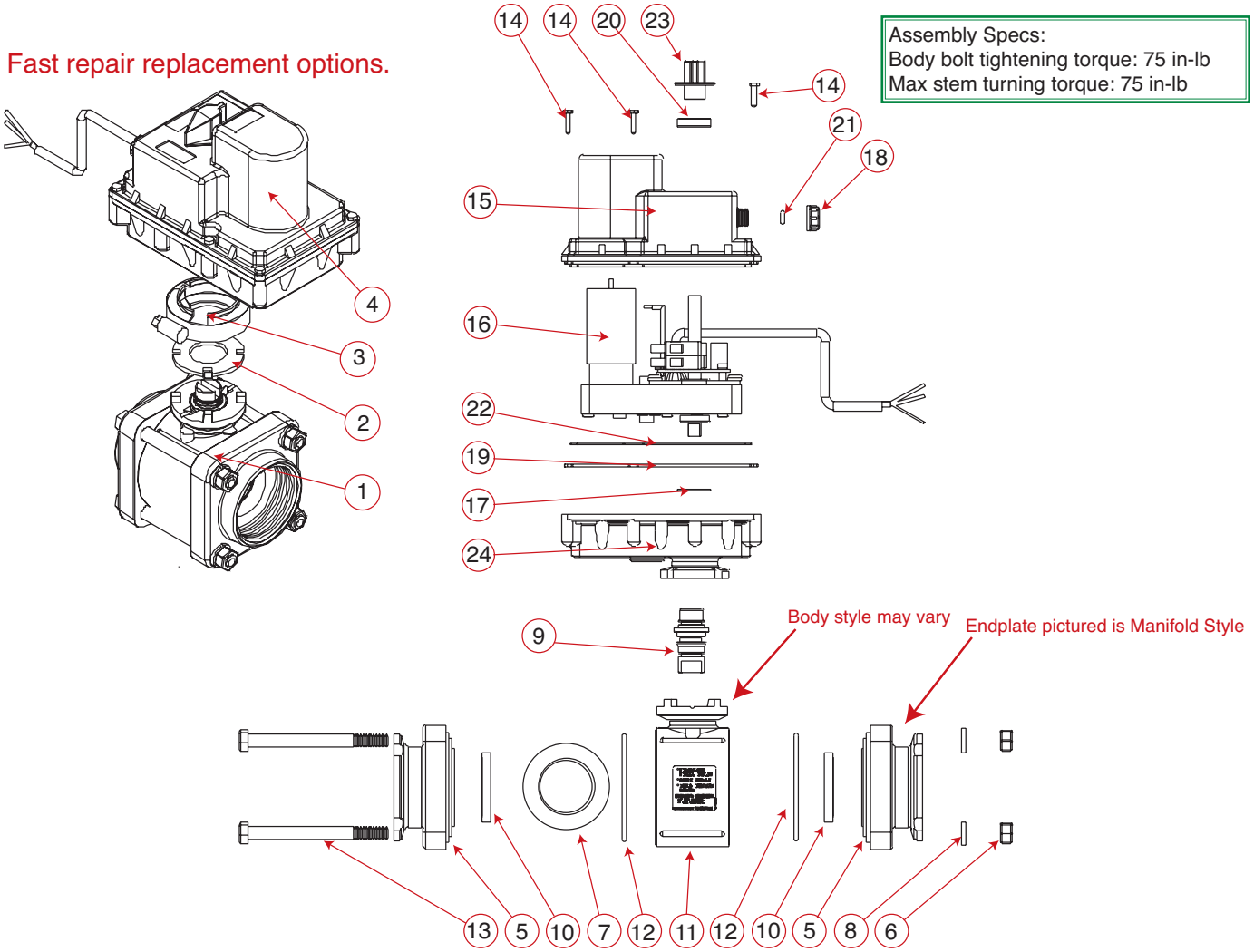

REPLACEMENT PARTS EV204SLFP-EV204BLFP				
ITEM	PART NO	DESCRIPTION	QTY	PRICE EA
1	EV204SLXR1	2" Full Port Electric Valve Sub Assembly	1	
1	EV204BLXR1	2" Full Port Electric Valve Sub Assembly	1	
2	MVE004	Electric Valve Flange Gasket	1	
3	FC100	1" Flange Clamp	1	
4	EV4100	1¼ Second 3 Wire Motor Assembly	1	
4	EVR4100	Regulating 4 Wire, 4 Second	1	
5	VE25356A	2" Full Port Threaded End Plate	2	
6	V20019	⅜" 16 SS Hex Nut	4	
7	VE25355	2" 316 SS Hollow Ball	1	
8	V20018	⅜" SS Lock Washer	4	
9	MEV25151	1" SS Stem w/Seals	1	
10	VE25258A	2" Full Port Electric Ball Seat	2	
11	MEV25354AB	2" Full Port Bottom Load Body	1	
11	MEV25354AS	2" Full Port Side Load Body	1	
12	V25264	2" FKM (viton type) Body O-Ring	2	

REPLACEMENT PARTS EV204SLFP-EV204BLFP				
ITEM	PART NO	DESCRIPTION	QTY	PRICE EA
13	V25017	⅜" x 4½" SS Body Bolt	4	
14	VE15220	Housing Screw	6	
15	MEV25102A	Housing Top for Large Motor	1	
16	VE4987	1¼" High Torque On/Off Motor	1	
17	MVE107	Motor Shaft Gasket	1	
18	MVE002	Heyco ¼" Threaded Bushing	1	
19	MVE104	Outer Housing Gasket	1	
20	VE109E	Indicator Seal	1	
21	MVE007	3mm x 5mm FKM (viton type) O-Ring	1	
22	MVE106	Inner Housing Gasket	1	
23	VE107B	Flow Indicator	1	
24	MEV25101	Housing Bottom for Large Motor	1	
25	EV25210	Repair Kit (Includes items 2, 9, 10, 12)	1	

Manifold Flange Connections

NO THREADS.
NO SWEAT.

Smart. The quick–change connection allows you to replace or inspect fittings in seconds as opposed to time consuming threaded liquid handling systems.

Easy to Use. There is no pipe thread installation, no chance of cross threading, no pipe sealant and no cure time needed.

Versatile. By nature of the connection – it is easier to redesign, alleviate space constraints and add pieces to your liquid handling system.

Universal. Replaces fittings made with either traditional National Pipe Thread (NPT) or British Standard Pipe Thread (BSP) connections. So no matter what part of the world you live in, you too can use Banjo Manifold Connections.

Breadth. Banjo Manifold Connections are available in Electric Valves, 3-Way Valves, Bolted Ball Valves, Stubby Valves, Dry-Disconnects, Flow Meters, Sweeps, Line Strainers, Hose Barbs, Couplings, Fittings, Swivels, Tank Fittings and Pumps.

Original System

Updated System

1" Banjo Electric Manifold Valve Assemblies

2 Valve Manifold

2 VALVE MANIFOLD ASSEMBLY (M200 SERIES)					
PART NO	DESCRIPTION	MAX PSI	PIPE SIZE	QTY	PRICE EA
MEV102CF	1" Manifold Valve Assembly 2" Inlet Flanges, 1" Outlet Flanges	150	2" In 1" Out	1	

3 Valve Manifold

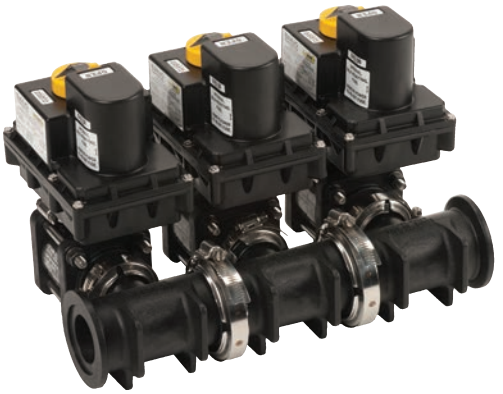

3 VALVE MANIFOLD ASSEMBLY (M200 SERIES)					
PART NO	DESCRIPTION	MAX PSI	PIPE SIZE	QTY	PRICE EA
MEV103CF	1" Manifold Valve Assembly 2" Inlet Flanges, 1" Outlet Flanges	150	2" In 1" Out	1	

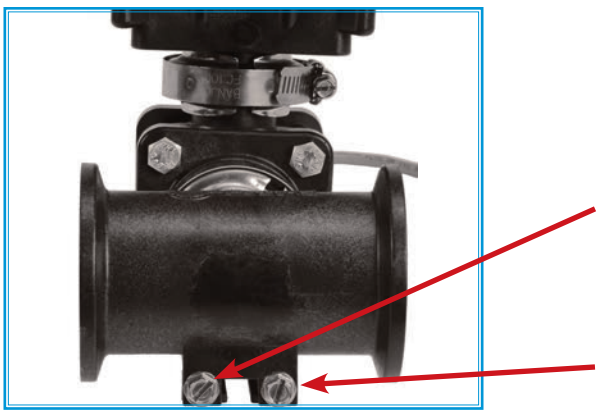

3 VALVE MANIFOLD ASSEMBLY (M200 SERIES) W/ MOUNTING BRACKETS					
PART NO	DESCRIPTION	MAX PSI	PIPE SIZE	QTY	PRICE EA
MEV103MB	1" Manifold Valve Assembly 2" Inlet Flanges, 1" Outlet Flanges w/ Mounting Brackets	150	2" In 1" Out	1	

FLANGED MOUNTING BRACKET TEE					
PART NO	DESCRIPTION	MAX PSI	PIPE SIZE	QTY	PRICE EA
M200100TEEB	2" x 1" Standard Port Flanged Tee w/ Mounting Bracket	150	2" In 1" Out	1	

4 Valve Manifold

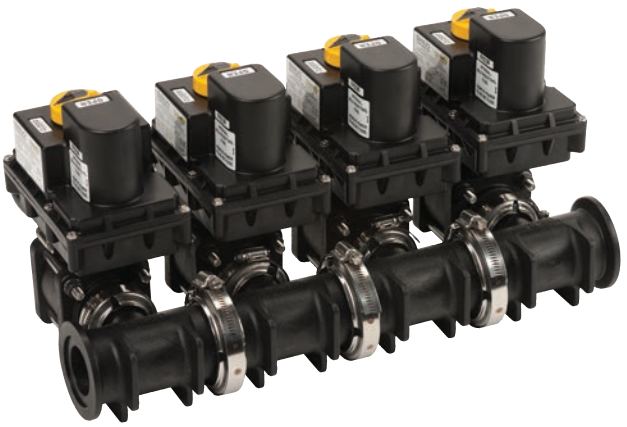

4 VALVE MANIFOLD ASSEMBLY (M200 SERIES)					
PART NO	DESCRIPTION	MAX PSI	PIPE SIZE	QTY	PRICE EA
MEV104CF	1" Manifold Valve Assembly 2" Inlet Flanges, 1" Outlet Flanges	150	2" In 1" Out	1	

5 Valve Manifold

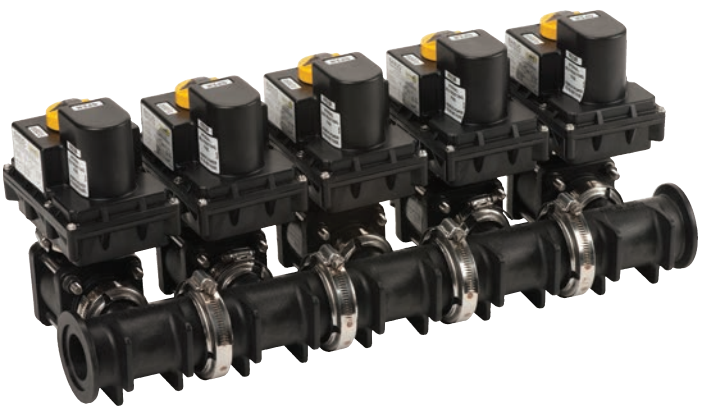

5 VALVE MANIFOLD ASSEMBLY (M200 SERIES)					
PART NO	DESCRIPTION	MAX PSI	PIPE SIZE	QTY	PRICE EA
MEV105CF	1" Manifold Valve Assembly 2" Inlet Flanges, 1" Outlet Flanges	150	2" In 1" Out	1	

1" Micro Electric Manifold Valve

FEATURES

- 12 Volt DC
- Stationary current draw: less than 0.04 amps.
- Rotating current draw: less than 0.40 amps.
- Stall current: 0.75 amps
- Response time: 1/3 sec open to close
- TFM seats
- EPDM seals
- Fiberglass reinforced polypropylene.
- Integrated mounting slot
- Standard 3 wire configuration.
- Max Pressure = 200 PSI @ 70 °F.

Don't forget the manifold connections on pages 77-81.

1/3 Second Response Time

1" ON/OFF ELECTRIC MANIFOLD VALVE						
PART NO	DESCRIPTION	MAX PSI	PIPE SIZE	OPENING THRU BALL	QTY	PRICE EA
MLEV100	1" Manifold Electric Valve	200	1"	½"	1	

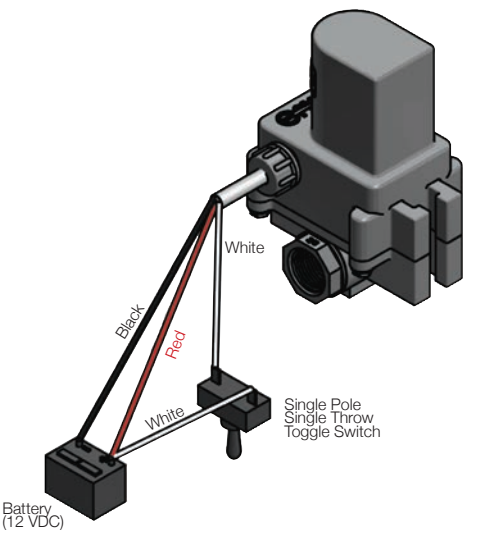

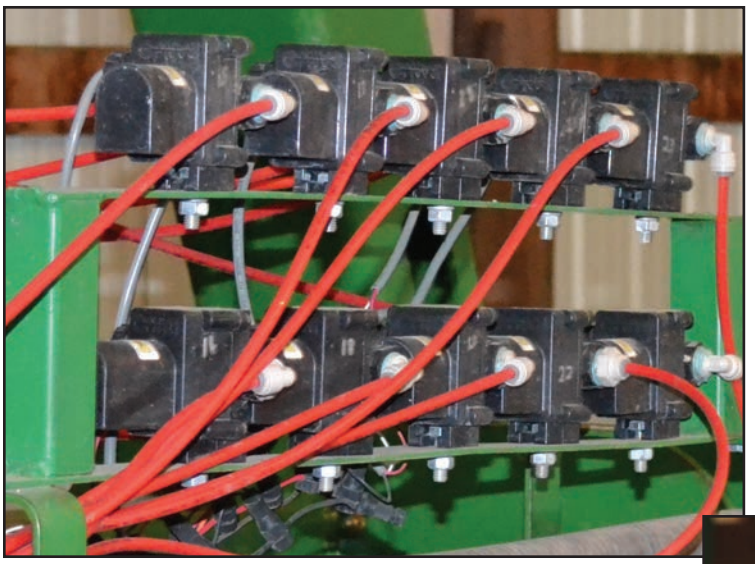

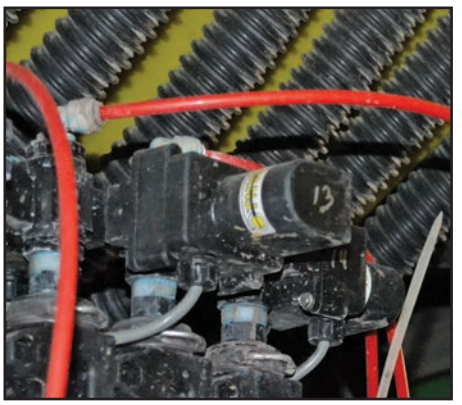

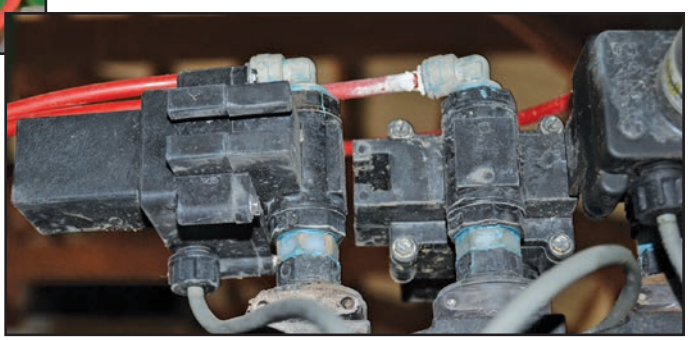

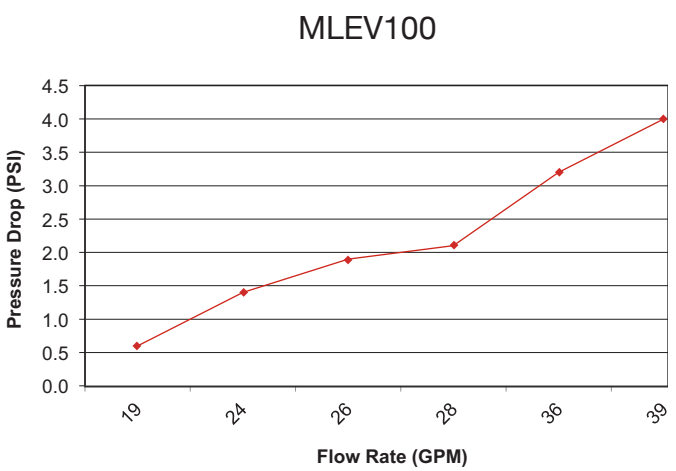
MLEV100
Pressure Drop (PSI)
4.5
4.0
3.5
3.0
2.5
2.0
1.5
1.0
0.5
0.0
19
24
26
28
36
39
Flow Rate (GPM)

1"-2" Electric Manifold Valves

FEATURES

- 1"-2" has 316 stainless steel ball & stem.
- Fiberglass reinforced polypropylene.
- Glass reinforced PTFE seats.
- FKM (viton type) or EPDM O-rings.
- 12-volt DC operated.
- 150 P.S.I. maximum pressure.
- Internally fused/automatic reset.
- Open/closed indicator.

Don't forget the manifold connections on pages 77-81.

¾ to 1¼ SECOND RESPONSE TIME

1", 2" & 3" ON/OFF ELECTRIC MANIFOLD VALVES						
PART NO	DESCRIPTION	MAX PSI	PIPE SIZE	OPENING THRU BALL	QTY	PRICE EA
MEV100CF	1" Full Port Electric Valve	150	1"	1"	1	
MEV200CF	2" Standard Port Electric Valve	150	2"	1½"	1	
MEV220CF	2" Full Port Electric Valve	150	2"	2"	1	

4 SECOND RESPONSE TIME

1" & 2" REGULATING ELECTRIC MANIFOLD VALVES						
PART NO	DESCRIPTION	MAX PSI	PIPE SIZE	OPENING THRU BALL	QTY	PRICE EA
MEVR100CF	1" Full Port Electric Valve	150	1"	1"	1	
MEVR200CF	2" Standard Port Electric Valve	150	2"	1½"	1	
MEVR220CF	2" Full Port Electric Valve	150	2"	2"	1	

Note: 2 wire regulating and other response times available.
Contact our Sales Team for part number and availability of valves.

On/Off
Wiring Diagram

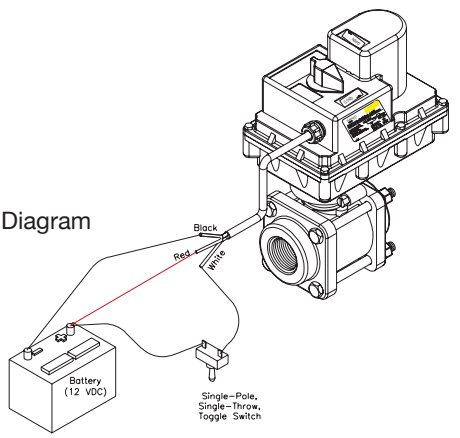

Regulating Wiring
Diagram

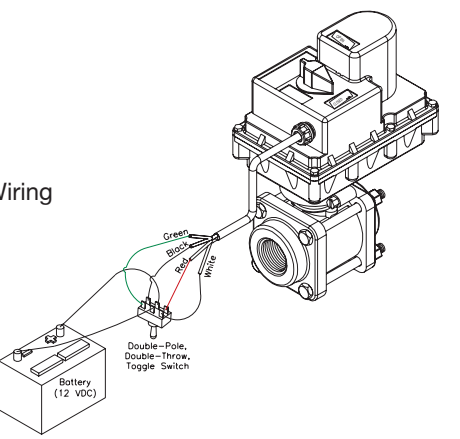

MANIFOLD FLANGE CONNECTIONS

Fast repair replacement options.

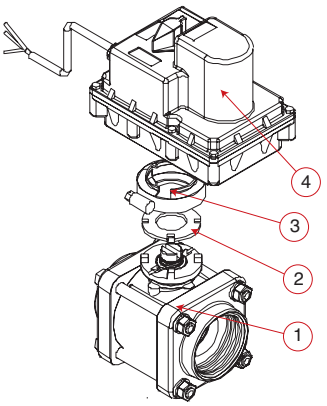

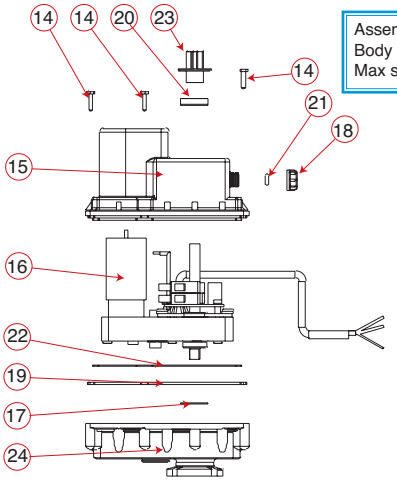

Assembly Specs:
Body bolt tightening torque: 75 in-lb
Max stem turning torque: 75 in-lb

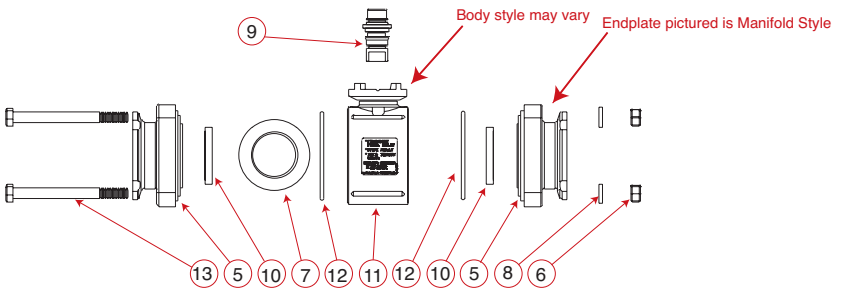

REPLACEMENT PARTS
MEV100CF-MEV200CF-MEV220CF-MEV300CF-MEVR100CF-MEVR200CF-MEVR220CF

ITEM	PART NO	DESCRIPTION	QTY	PRICE EA
1	MEV100XR1	1" Full Port Electric Valve Sub Assembly	1	
1	MEV200XR1	2" Electric Valve Sub Assembly	1	
1	MEV220XR1	2" Full Port Electric Valve Sub Assembly	1	
2	MVE004	Electric Valve Flange Gasket	1	
3	FC100	1" Flange Clamp	1	
4	EV3100	1" ¾ Second 3 Wire Motor Assembly	1	
4	EV4100	2" 1¼ Second 3 Wire Motor Assembly	1	
4	VE5630	3" 3 Second 3 Wire Motor Assembly	1	
4	EVR3100	Regulating 4 Wire, 4 Second for 1"	1	
4	EVR4100	Regulating 4 Wire, 4 Second for 2"	1	
5	VE10278A	1" Manifold End Plate	2	
5	VE20294A	2" Manifold End Plate	2	
5	VE25378A	2" Full Port Manifold End Plate	2	
6	V10119	5/16" SS Body Nut	4	
6	V20019	3/8" 16 SS Hex Nut	4	
7	VE10155SSH	1" 316 SS Hollow Ball	1	
7	VE20255SSH	2" 316 SS Hollow Ball	1	
7	VE25255SSH	2" Full Port 316 SS Hollow Ball	1	
8	V10118	5/16" SS Lock Washer	4	
8	V20018	3/8" SS Lock Washer	4	
9	MEV10151	1" SS Stem w/Seals	1	
9	MEV25151	2" SS Stem w/Seals	1	
10	VE10258A	1" Electric Ball Seat	2	
10	VE20258A	2" Electric Ball Seat	2	
10	VE25258A	2" Full Port Electric Ball Seat	2	
11	MEV10254A	1" Body	1	
11	MEV20254A	2" Body	1	

REPLACEMENT PARTS
MEV100CF-MEV200CF-MEV220CF-MEV300CF-MEVR100CF-MEVR200CF-MEVR220CF

ITEM	PART NO	DESCRIPTION	QTY	PRICE EA
11	MEV25254A	2" Full Port Body	1	
12	VE10264	1" FKM (viton type) Body O-Ring	2	
12	VE20264	2" FKM (viton type) Body O-Ring	2	
12	V25264	2" FKM (viton type) Body O-Ring	2	
13	V10117	5/16" x 3½" SS Body Bolt	4	
13	V20017	3/8" x 4" SS Body Bolt (2")	4	
13	V25017	3/8" x 4½" SS Body Bolt (2" FP)	4	
14	VE15220	Housing Screw	6	
15	MEV10102A	Housing Top for Small Motor (1")	1	
15	MEV25102A	Housing Top for Large Motor (2")	1	
16	VE4984	¾ Second High Torque On/Off Motor	1	
16	VE4987	1¼ Second High Torque On/Off Motor	1	
16	VE4983	4 Second 4 Wire Regulating Motor for 1"	1	
16	VE4988	4 Second 12 Volt Wire Regulating Motor 2"	1	
17	MVE107	Motor Shaft Gasket	1	
18	MVE002	Heyco ¼" Threaded Bushing	1	
19	MVE104	Outer Housing Gasket	1	
20	VE109E	Indicator Seal	1	
21	MVE007	3mm x 5mm FKM (viton type) O-Ring	1	
22	MVE106	Inner Housing Gasket	1	
23	VE107B	Flow Indicator	1	
24	MEV10101	1" Housing Bottom for Large Motor	1	
24	MEV25101	2" Housing Bottom for Large Motor	1	
25	EV10210	1" Repair Kit (Includes items 2, 9, 10, 12)	1	
25	EV20210	2" Repair Kit (Includes items 2, 9, 10, 12)	1	
25	EV25210	2" FP Repair Kit(Includes items 2,9,10,12)	1	

3" Electric Manifold Valves

FEATURES

- 3" has poly ball & stainless steel stem.
- Fiberglass reinforced polypropylene.
- Glass reinforced PTFE seats.
- FKM (viton type) or EPDM O-rings.
- 12-volt DC operated.
- 150 P.S.I. maximum pressure.
- Internally fused/automatic reset.
- Open/closed indicator.

Don't forget the manifold connections on pages 77-81.

3 SECOND RESPONSE TIME

3" ON/OFF ELECTRIC MANIFOLD VALVES						
PART NO	DESCRIPTION	MAX PSI	PIPE SIZE	OPENING THRU BALL	QTY	PRICE EA
MEV300CF	3" Full Port Electric Valve	100	3"	3"	1	

Note: 2 wire regulating and other response times available. Contact our Sales Team for part number and availability of valves.

On/Off
Wiring Diagram

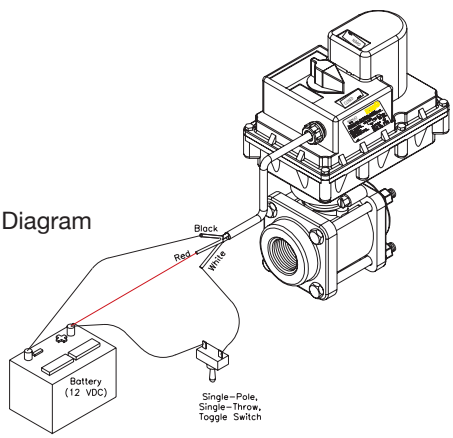

MANIFOLD FLANGE CONNECTIONS

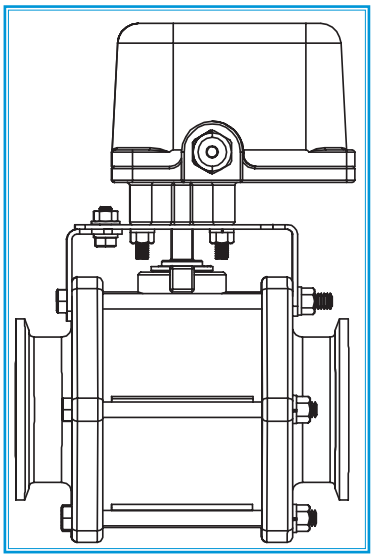

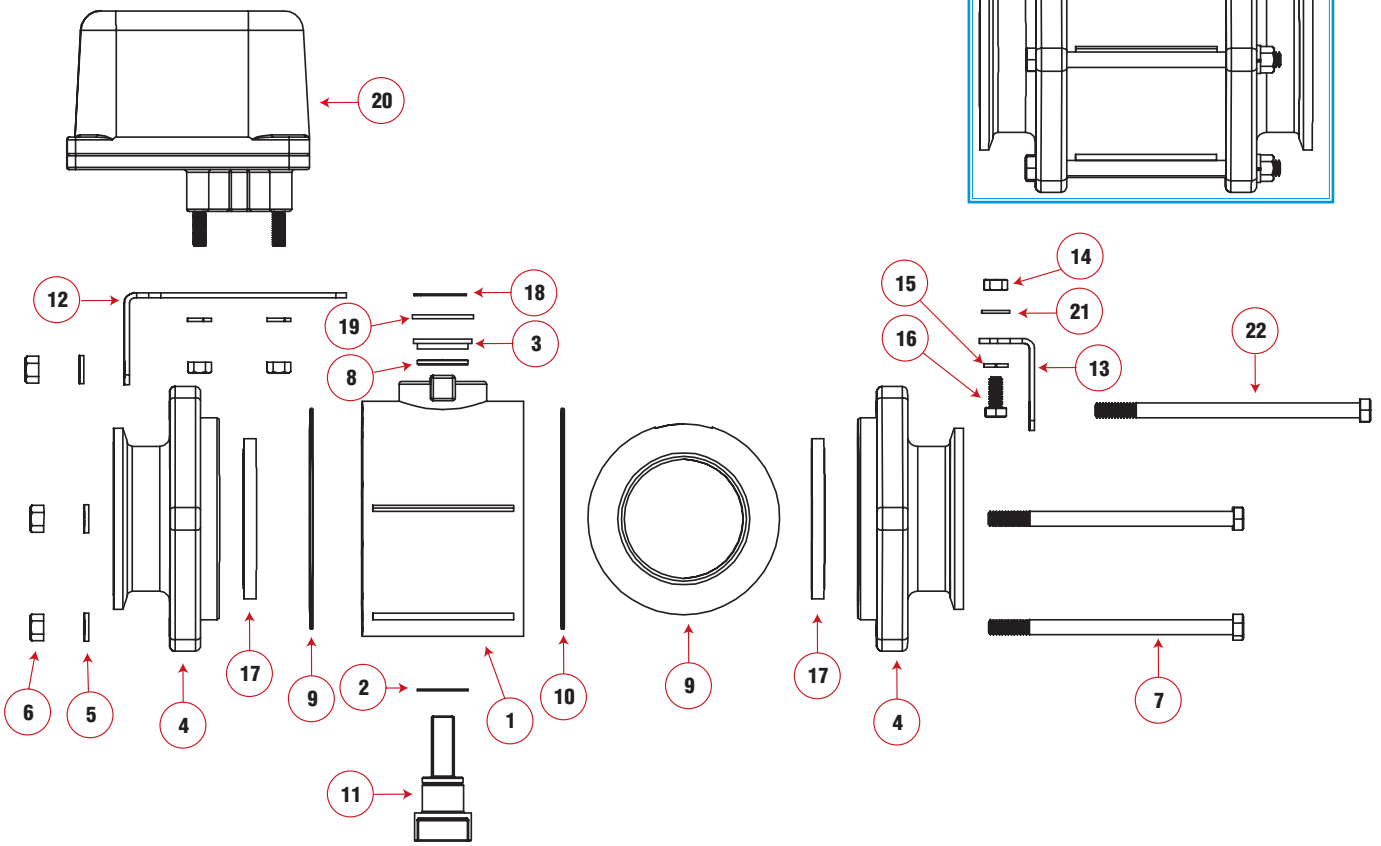

REPLACEMENT PARTS EV300FP				
ITEM	PART NO	DESCRIPTION	QTY	PRICE EA
1	V35254	3" Body	1	
2	V25060	Stem Shim	1	
3	V25160	Upper Stem Bushing	1	
4	V35278	3" Manifold End Plate	2	
5	V20018	3/8" SS Lock Washer	6	
6	V20019	3/8" 16 SS Hex Nut	6	
7	V35017	3/8" SS Bolt	4	
8	V25163	Stem O-Ring	1	
9	V35255ASS	3" Stainless Steel Ball	1	
10	V35265	3" FKM (viton type) Body O-Ring	2	
11	VE30151SS	SS Stem w/Out Seals	1	

REPLACEMENT PARTS EV300FP				
ITEM	PART NO	DESCRIPTION	QTY	PRICE EA
12	VE35188	Actuator Bracket-Large	1	
13	VE35189	Actuator Bracket-Small	1	
14	V10119	5/16" Hex Nut	6	
15	V10118	5/16" Lock Washer	6	
16	17019	Hex Bolt	2	
17	VE35258A	Ball Seat	2	
18	VE30022	1" Snap Ring	1	
19	VE30121	Stem Washer	1	
20	VE5630	3 Sec, 12VDC Motor	1	
21	12901	Washer	2	
22	V35018	3/8" SS Bolt	2	

3-Way Side Load Electric Manifold Valves 1", 1½", & 2" Full Port

FEATURES

- 316 stainless steel ball & stem.
- Fiberglass reinforced polypropylene.
- Glass reinforced PTFE seats.
- FKM (viton type) or EPDM O-rings.
- 12-volt DC operated.
- 150 P.S.I. maximum pressure.
- Internally fused/automatic reset.
- Open/closed indicator.

Don't forget the manifold connections on pages 77-81.

¾ to 1¼ RESPONSE TIME

1" & 2" SIDE LOAD ELECTRIC MANIFOLD VALVES						
PART NO	DESCRIPTION	MAX PSI	PIPE SIZE	OPENING THRU BALL	QTY	PRICE EA
MEV100SLCF	1" Full Port Electric Valve	150	1"	1"	1	
MEV200SLCF	2" Standard Port Electric Valve	150	2"	1½"	1	
MEV220SLCF	2" Full Port Electric Valve	150	2"	2"	1	

SIDE LOAD:
Directional flow left or right. Valve flow cannot be turned off.

4 SECOND RESPONSE TIME

1" & 2" REGULATING SIDE LOAD ELECTRIC MANIFOLD VALVES						
PART NO	DESCRIPTION	MAX PSI	PIPE SIZE	OPENING THRU BALL	QTY	PRICE EA
MEVR100SLCF	1" Full Port Electric Valve	150	1"	1"	1	
MEVR200SLCF	2" Standard Port Electric Valve	150	2"	1½"	1	
MEVR220SLCF	2" Full Port Electric Valve	150	2"	2"	1	

On/Off Wiring Diagram

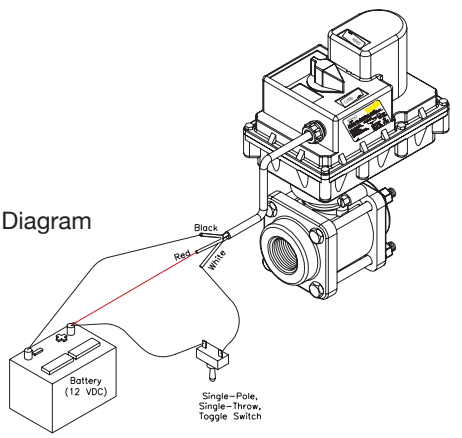

Regulating Wiring Diagram

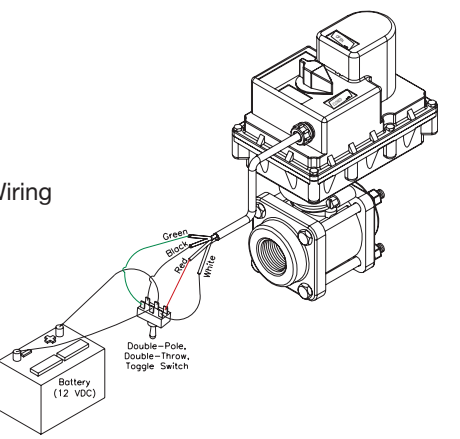

MANIFOLD FLANGE CONNECTIONS

Fast repair replacement options.

Assembly Specs:
Body bolt tightening torque: 75 in-lb
Max stem turning torque: 75 in-lb

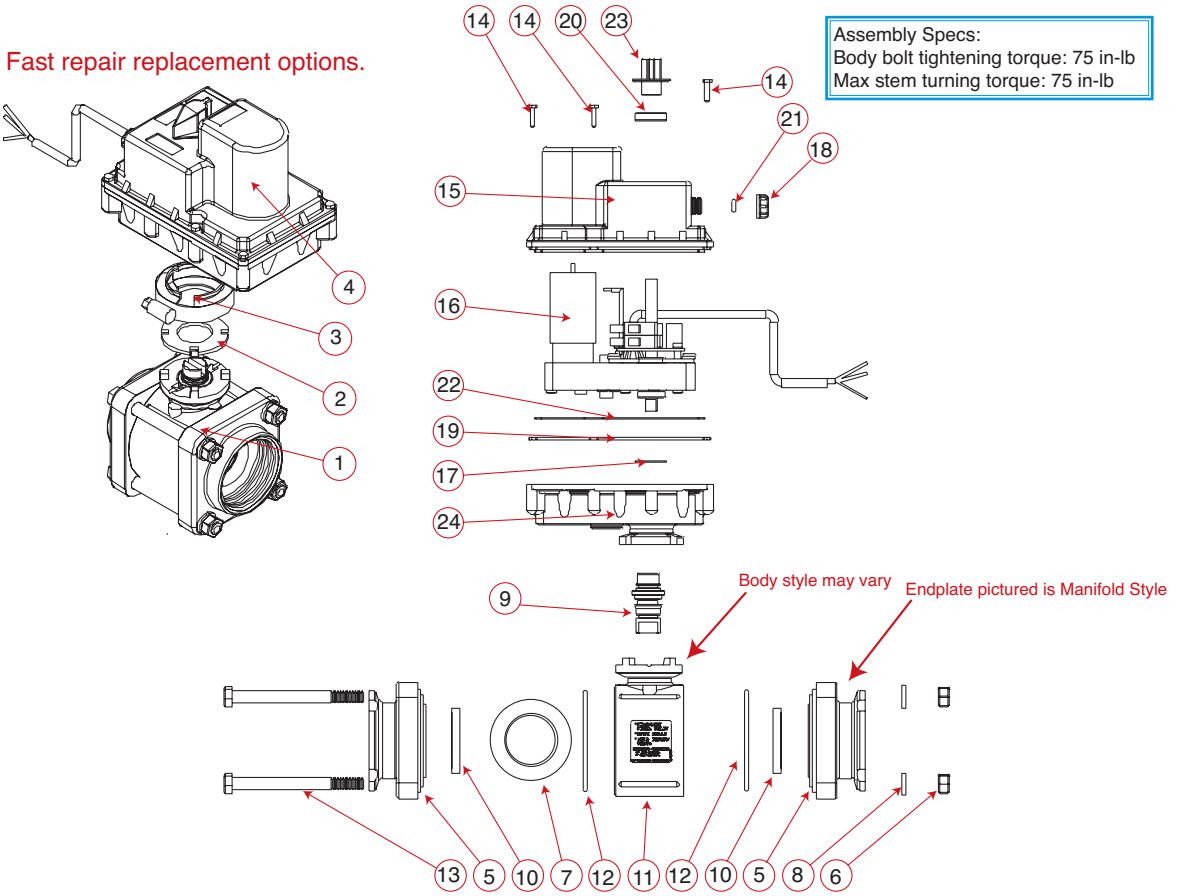

REPLACEMENT PARTS MEV100SLCF-MEVR100SLCF-MEV200SLCF-MEVR200SLCF -MEV220SLCF-MEVR220SLCF				
ITEM	PART NO	DESCRIPTION	QTY	PRICE EA
1	MEV100SLXR1	1" Full Port Electric Valve Sub Assembly	1	
1	MEV200SLXR1	2" Electric Valve Sub Assembly	1	
1	MEV220SLXR1	2" Full Port Electric Valve Sub Assembly	1	
2	MVE004	Electric Valve Flange Gasket	1	
3	FC100	1" Flange Clamp	1	
4	EV3100	1" ¾ Second 3 Wire Motor Assembly	1	
4	EV4100	2" 1¼ Second 3 Wire Motor Assembly	1	
4	EVR3100	Regulating 4 Wire, 4 Second for 1"	1	
4	EVR4100	Regulating 4 Wire, 4 Second for 2"	1	
5	VE10278A	1" Manifold End Plate	2	
5	VE20294A	2" Manifold End Plate	2	
5	VE25378A	2" Full Port Manifold End Plate	2	
6	V10119	5/16" SS Body Nut	4	
6	V20019	3/8" 16 SS Hex Nut	4	
7	VE10355	1" 316 SS Hollow Ball	1	
7	VE20355	2" 316 SS Hollow Ball	1	
7	VE25355	2" Full Port 316 SS Hollow Ball	1	
8	V10118	5/16" SS Lock Washer	4	
8	V20018	3/8" SS Lock Washer	4	
9	MEV10151	1" SS Stem w/Seals	1	
9	MEV25151	2" SS Stem w/Seals	1	
10	VE10258A	1" Electric Ball Seat	2	
10	VE20258A	2" Electric Ball Seat	2	
10	VE25258A	2" Full Port Electric Ball Seat	2	
11	MEV10354AS	1" Body	1	
11	MEV20354AS	2" Body	1	
11	MEV25354AS	2" Full Port Body	1	

REPLACEMENT PARTS MEV100SLCF-MEVR100SLCF-MEV200SLCF-MEVR200SLCF -MEV220SLCF-MEVR220SLCF				
ITEM	PART NO	DESCRIPTION	QTY	PRICE EA
12	VE10264	1" FKM (viton type) Body O-Ring	2	
12	VE20264	2" FKM (viton type) Body O-Ring	2	
12	V25264	2" Full Port FKM (viton type) Body O-Ring	2	
13	V10117	5/16" x 3½" SS Body Bolt	4	
13	V20017	3/8" x 4" SS Body Bolt (2")	4	
13	V25017	3/8" x 4½" SS Body Bolt (2" FP)	4	
14	VE15220	Housing Screw	6	
15	MEV10102A	Housing Top for Small Motor (1")	1	
15	MEV25102A	Housing Top for Large Motor (2")	1	
16	VE4984	¾ Second High Torque On/Off Motor	1	
16	VE4987	1¼ Second High Torque On/Off Motor	1	
16	VE4983	4 Second 4 Wire Regulating Motor for 1"	1	
16	VE4988	4 Second 12 Volt Wire Regulating Motor 2"	1	
17	MVE107	Motor Shaft Gasket	1	
18	MVE002	Heyco ¼" Threaded Bushing	1	
19	MVE104	Outer Housing Gasket	1	
20	VE109E	Indicator Seal	1	
21	MVE007	3mm x 5mm FKM (viton type) O-Ring	1	
22	MVE106	Inner Housing Gasket	1	
23	VE107B	Flow Indicator	1	
24	MEV10101	1" Housing Bottom for Large Motor	1	
24	MEV25101	2" Housing Bottom for Large Motor	1	
25	EV10210	1" Repair Kit (Includes items 2, 9, 10, 12)	1	
25	EV20210	2" Repair Kit (Includes items 2, 9, 10, 12)	1	
25	EV25210	2" FP Repair Kit (Includes items 2, 9, 10, 12)	1	

3-Way Bottom Load Electric Manifold Valves 1", 1½", & 2" Full Port

FEATURES

- 316 stainless steel ball & stem.
- Fiberglass reinforced polypropylene.
- Glass reinforced PTFE seats.
- FKM (viton type) or EPDM O-rings.
- 12-volt DC operated.
- 150 P.S.I. maximum pressure.
- Internally fused/automatic reset.
- Open/closed indicator.

On/Off
Wiring Diagram

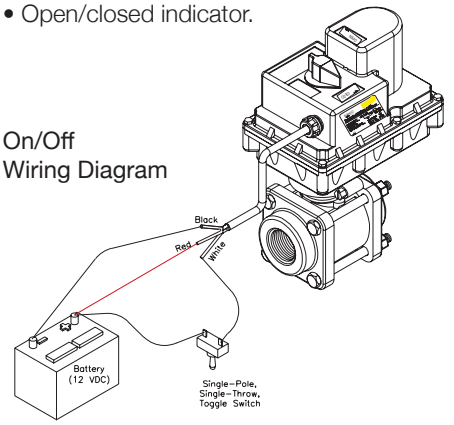

¾ to 1¼ Response time

1" & 2" BOTTOM LOAD ELECTRIC MANIFOLD VALVES						
PART NO	DESCRIPTION	MAX PSI	PIPE SIZE	OPENING THRU BALL	QTY	PRICE EA
MEV100BLCF	1" Full Port Electric Valve	150	1"	1"	1	
MEV200BLCF	2" Standard Port ElectricValve	150	2"	1½"	1	
MEV220BLCF	2" Full Port Electric Valve	150	2"	2"	1	

NOTE: NO Regulating Valve available for 3-way bottom load electric manifold valves.

Manifold Pressure Spike Valves

FEATURES

- Precision molded in polypropylene. Polypropylene is reinforced with fiberglass for additional strength.
- Preset pressure spring.
- Poppet is diamond turned, after molding, to make it spherically perfect, which provides precise seal.
- 360° Orientation.
- FKM (viton type) seals.

MANIFOLD PRESSURE SPIKE VALVES				
PART NO	DESCRIPTION	PRESSURE SPIKE	QTY	PRICE EA
MPRV100-050	1" Pressue Spike Valve	50 PSI	1	
MPRV100-075	1" Pressue Spike Valve	75 PSI	1	
MPRV100-100	1" Pressue Spike Valve	100 PSI	1	
MPRV100-125	1" Pressue Spike Valve	125 PSI	1	
MPRV100-150	1" Pressue Spike Valve	150 PSI	1	

Fast repair replacement options.

Assembly Specs:
Body bolt tightening torque: 75 in-lb
Max stem turning torque: 75 in-lb

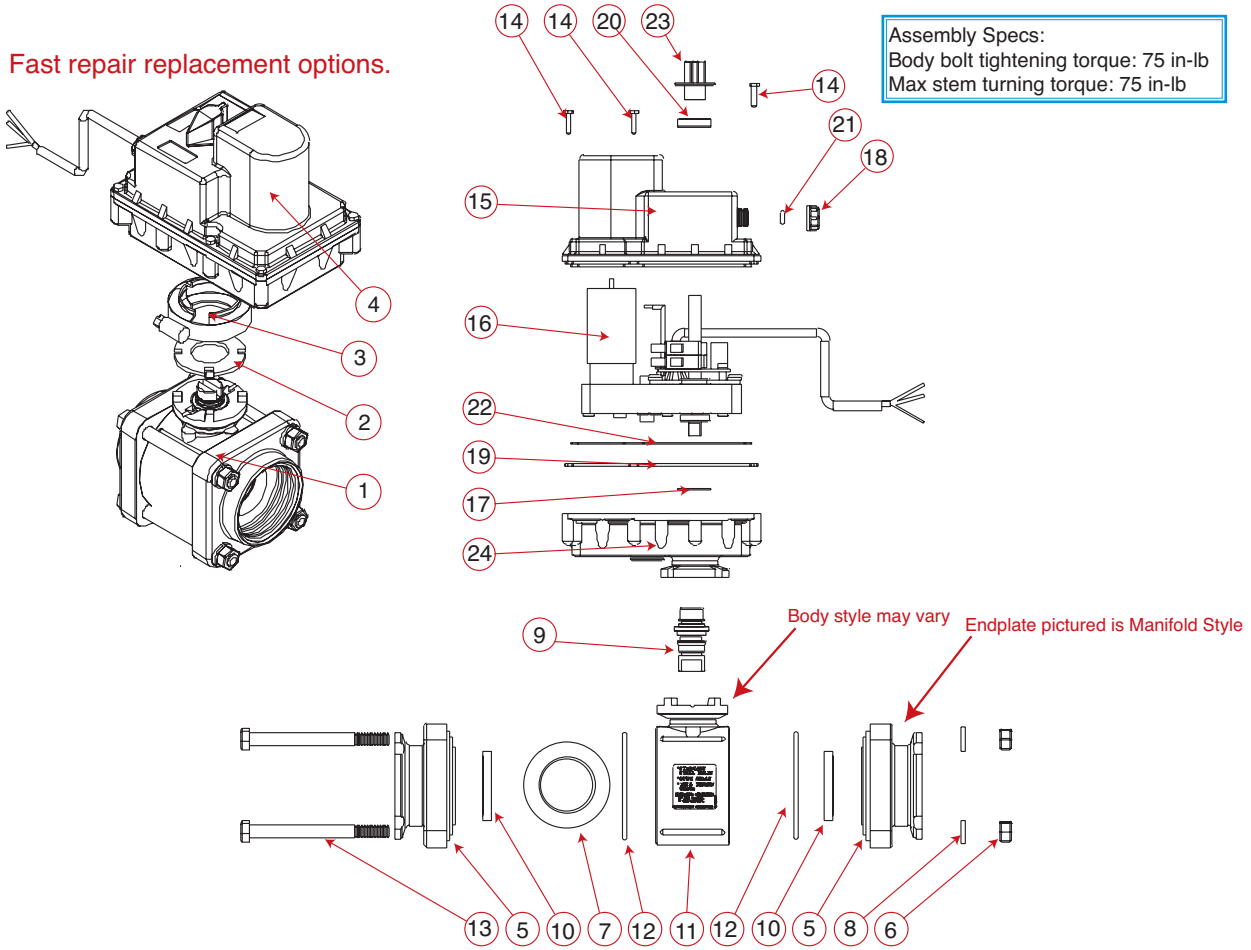

REPLACEMENT PARTS MEV100BLCF-MEV200BLCF-MEV220BLCF				
ITEM	PART NO	DESCRIPTION	QTY	PRICE EA
1	MEV100BLXR1	1" Full Port Electric Valve Sub Assembly	1	
1	MEV200BLXR1	2" Electric Valve Sub Assembly	1	
1	MEV220BLXR1	2" Full Port Electric Valve Sub Assembly	1	
2	MVE004	Electric Valve Flange Gasket	1	
3	FC100	1" Flange Clamp	1	
4	EV3100	1" ¾ Second 3 Wire Motor Assembly	1	
4	EV4100	2" 1¼ Second 3 Wire Motor Assembly	1	
5	VE10278A	1" Manifold End Plate	2	
5	VE20294A	2" Manifold End Plate	2	
5	VE25378A	2" Full Port Manifold End Plate	2	
6	V10119	5/16" SS Body Nut	4	
6	V20019	3/8" 16 SS Hex Nut	4	
7	VE10355	1" 316 SS Hollow Ball	1	
7	VE20355	2" 316 SS Hollow Ball	1	
7	VE25355	2" Full Port 316 SS Hollow Ball	1	
8	V10118	5/16" SS Lock Washer	4	
8	V20018	3/8" SS Lock Washer	4	
9	MEV10151	1" SS Stem w/Seals	1	
9	MEV25151	2" SS Stem w/Seals	1	
10	VE10258A	1" Electric Ball Seat	2	
10	VE20258A	2" Electric Ball Seat	2	
10	VE25258A	2" Full Port Electric Ball Seat	2	
11	MEV10354AB	1" Body	1	
11	MEV20354AB	2" Body	1	

REPLACEMENT PARTS MEV100BLCF-MEV200BLCF-MEV220BLCF				
ITEM	PART NO	DESCRIPTION	QTY	PRICE EA
11	MEV25354AB	2" Full Port Body	1	
12	VE10264	1" FKM (viton type) Body O-Ring	2	
12	VE20264	2" FKM (viton type) Body O-Ring	2	
12	V25264	2" Full Port FKM (viton type) Body O-Ring	2	
13	V10117	5/16" x 3½" SS Body Bolt	4	
13	V20017	3/8" x 4" SS Body Bolt (2")	4	
13	V25017	3/8" x 4½" SS Body Bolt (2" FP)	4	
14	VE15220	Housing Screw	6	
15	MEV10102A	Housing Top for Small Motor (1")	1	
15	MEV25102A	Housing Top for Large Motor (2")	1	
16	VE4984	¾ Second High Torque On/Off Motor	1	
16	VE4987	1¼ Second High Torque On/Off Motor	1	
17	MVE107	Motor Shaft Gasket	1	
18	MVE002	Heyco ¼" Threaded Bushing	1	
19	MVE104	Outer Housing Gasket	1	
20	VE109E	Indicator Seal	1	
21	MVE007	3mm x 5mm FKM (viton type) O-Ring	1	
22	MVE106	Inner Housing Gasket	1	
23	VE107B	Flow Indicator	1	
24	MEV10101	1" Housing Bottom for Large Motor	1	
24	MEV25101	2" Housing Bottom for Large Motor	1	
25	EV10210	1" Repair Kit (Includes items 2, 9, 10, 12)	1	
25	EV20210	2" Repair Kit (Includes items 2, 9, 10, 12)	1	
25	EV25210	2" FP RepairKit(Includes items 2,9,10,12)	1	

Manifold Bolted Ball Valves
4 and 6 Bolt Valves

FEATURES

- FKM (viton type) seals.
- PTFE self-lubricating stem bushings and seats cannot stick or bind.
- Precision molded in polypropylene. Polypropylene is reinforced with fiberglass for additional strength.
- Self-aligning ball moves freely against the PTFE seats for smooth operation. The valve opens and closes with very little pressure on the handle.
- Ball is diamond turned, after molding, to make it spherically perfect, which provides precise contact between ball and seats.

MANIFOLD 4 & 6 BOLTED VALVES						
PART NO	DESCRIPTION	MAX PSI	PIPE SIZE	OPENING THRU BALL	QTY	PRICE EA
MV100CF	1" Flange Ball Valve	150	1"	1"	24/box	
MV200CF	2" Flange Ball Valve	150	2"	1½"	12/box	
MV220CF	2" Full Port Flange Ball Valve	150	2"	2"	8/box	
MV300	3" Standard Flange Ball Valve	100	3"	2½"	6/box	
MV300CF	3" Full Port Flange Ball Valve	100	3"	3"	6/box	

For *faster* shipping, order in box quantities.

*Valve repair kits contain items marked with asterisk
1 Ball 2 Body O-Rings 1 Thrust Washer
2 Ball Seats 1 Upper Stem Bushing 1 Stem O-Ring

CHART 1

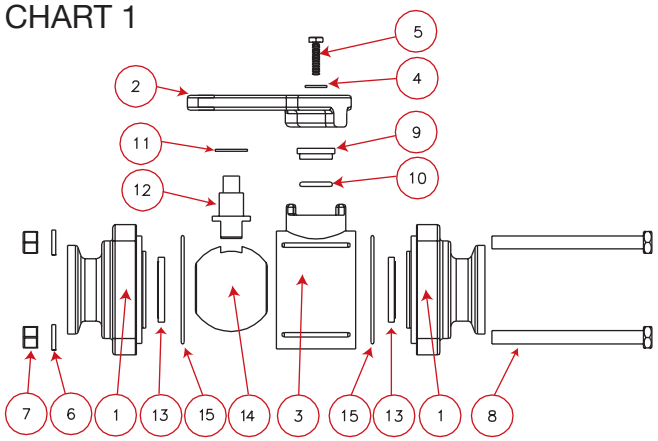

CHART 2

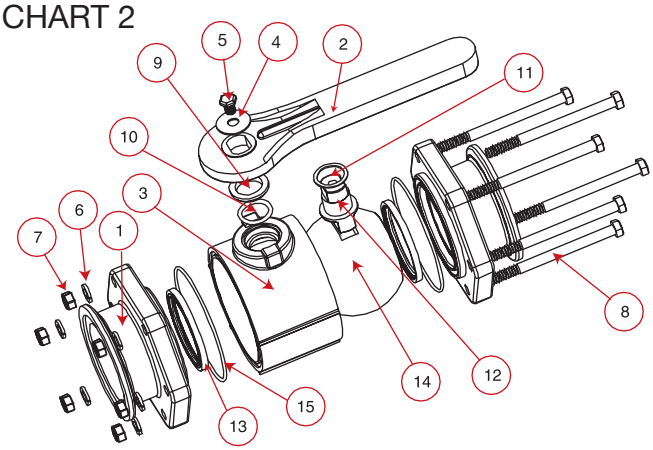

Chart 1

REPLACEMENT PARTS MV100CF				
ITEM	PART NO	DESCRIPTION	QTY	PRICE EA
1	V10278	1" Manifold End Plate	2	
2	V10153A	Handle	1	
3	V10254	Body	1	
4	V07021A	S.S. Handle Washer	1	
5	V10020A	#10 x 1¼" S.S. Handle Bolt	1	
6	V10118	5/16" S.S. Lock Washer	4	
7	V10119	5/16" S.S. Nut	4	
8	V10117	5/16" x 3½" S.S. Body Bolt	1	
9	V10159*	Upper Stem Bushing	1	
10	V10163*	FKM (viton type) Stem O-Ring	1	
11	V10060*	Thrust Washer	1	
12	V10151A	Stem	1	
13	V10258A*	Ball Seat	2	
14	V10155*	Ball	1	
15	V10264	FKM (viton type) Body O-RIng	2	
N/S	V10200	Repair Kit	1	

Chart 2

REPLACEMENT PARTS MV300				
ITEM	PART NO	DESCRIPTION	QTY	PRICE EA
1	MV30264	3" Manifold End Plate	2	$51.50
2	V25153	Handle	1	
3	V30254	Body	1	
4	V25121	S.S. Handle Washer	1	
5	V25020	3/8" x ½" S.S. Handle Bolt	1	
6	V20018	3/8" S.S. Lock Washer	6	
7	V20019	3/8" S.S. Nut	6	
8	V30017	3/8" x 5" S.S. Body Bolt	1	
9	V25160*	Upper Stem Bushing	1	
10	V25163*	FKM (viton type) Stem O-Ring	1	
11	V25060*	Thrust Washer	1	
12	V25151B	Stem	1	
13	V30258A*	Ball Seat	2	
14	V30255*	Ball	1	
15	V30265*	FKM (viton type) Body O-RIng	2	
N/S	V30200	Repair Kit	1	

REPLACEMENT PARTS MV200CF				
ITEM	PART NO	DESCRIPTION	QTY	PRICE EA
1	V20294	2" Manifold End Plate	2	
2	V20153	Handle	1	
3	V20254	Body	1	
4	V20021	S.S. Handle Washer	1	
5	V20020	¼" x ½" S.S. Handle Bolt	1	
6	V10118	3/8" S.S. Lock Washer	4	
7	V10119	3/8" S.S. Nut	4	
8	V10117	3/8" x 4½" S.S. Body Bolt	1	
9	V20159*	Upper Stem Bushing	1	
10	V20163*	FKM (viton type) Stem O-Ring	1	
11	V20060*	Thrust Washer	1	
12	V20151M	Stem	1	
13	V20258A*	Ball Seat	2	
14	V20255A*	Ball	1	
15	V20264*	FKM (viton type) Body O-RIng	2	
N/S	V20200	Repair Kit	1	

REPLACEMENT PARTS MV300CF				
ITEM	PART NO	DESCRIPTION	QTY	PRICE EA
1	V35278	3" Full Port Manifold End Plate	2	
2	V25153	Handle	1	
3	V35254	Body	1	
4	V25121	S.S. Handle Washer	1	
5	V25020	3/8" x ½" S.S. Handle Bolt	1	
6	V20018	3/8" S.S. Lock Washer	6	
7	V20019	3/8" S.S. Nut	6	
8	V35017	3/8" x 6" S.S. Body Bolt	6	
9	V25160*	Upper Stem Bushing	1	
10	V25163*	FKM (viton type) Stem O-Ring	1	
11	V25060*	Thrust Washer	1	
12	V25151B	Stem	1	
13	V35258A*	Ball Seat	2	
14	V35255A*	Ball	1	
15	V35265*	FKM (viton type) Body O-RIng	2	
N/S	V35200	Repair Kit	1	

REPLACEMENT PARTS MV220CF				
ITEM	PART NO	DESCRIPTION	QTY	PRICE EA
1	V25478	2" Full Port Manifold End Plate	2	
2	V25153	Handle	1	
3	V25254	Body	1	
4	V25121	S.S. Handle Washer	1	
5	V25020	3/8" x ½" S.S. Handle Bolt	1	
6	V20018	3/8" S.S. Lock Washer	4	
7	V20019	3/8" 16 SS Hex Nut	4	
8	V20017	3/8" x 4" S.S. Body Bolt	1	
9	V25160*	Upper Stem Bushing	1	
10	V25163*	FKM (viton type) Stem O-Ring	1	
11	V25060*	Thrust Washer	1	
12	V25151B	Stem	1	
13	V25258A*	Ball Seat	2	
14	V25255A*	Ball	1	
15	V25264*	FKM (viton type) Body O-RIng	2	
N/S	V25200	Repair Kit	1	

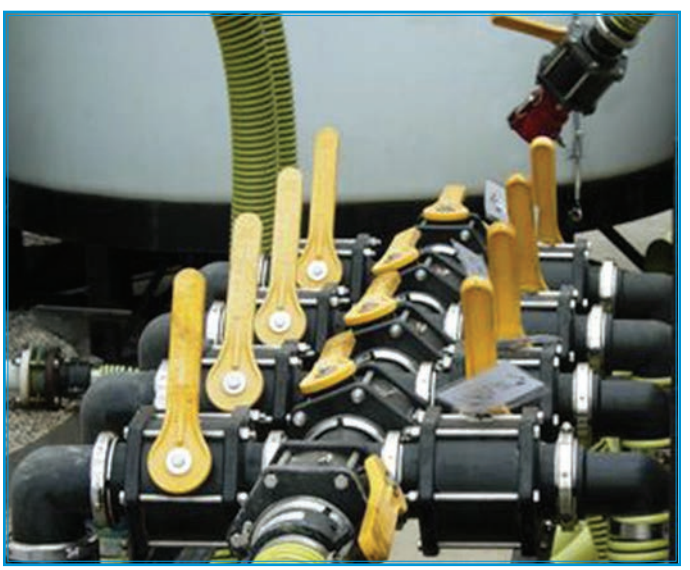

Manifold Bolted 5 Way Ball Valve

FEATURES

- FKM (viton type) seals.
- PTFE self-lubricating stem bushings and seats cannot stick or bind.
- Precision molded in polypropylene. Polypropylene is reinforced with fiberglass for additional strength.
- Self-aligning ball moves freely against the PTFE seats for smooth operation. The valve opens and closes with very little pressure on the handle.
- Ball is diamond turned, after molding, to make it spherically perfect, which provides precise contact between ball and seats.

MANIFOLD BOLTED 5 WAY VALVE						
PART NO	DESCRIPTION	MAX PSI	PIPE SIZE	OPENING THRU BALL	QTY	PRICE EA
MV225CF	2" Full Port Flange 5 Way Valve	150	2"	2"	1	

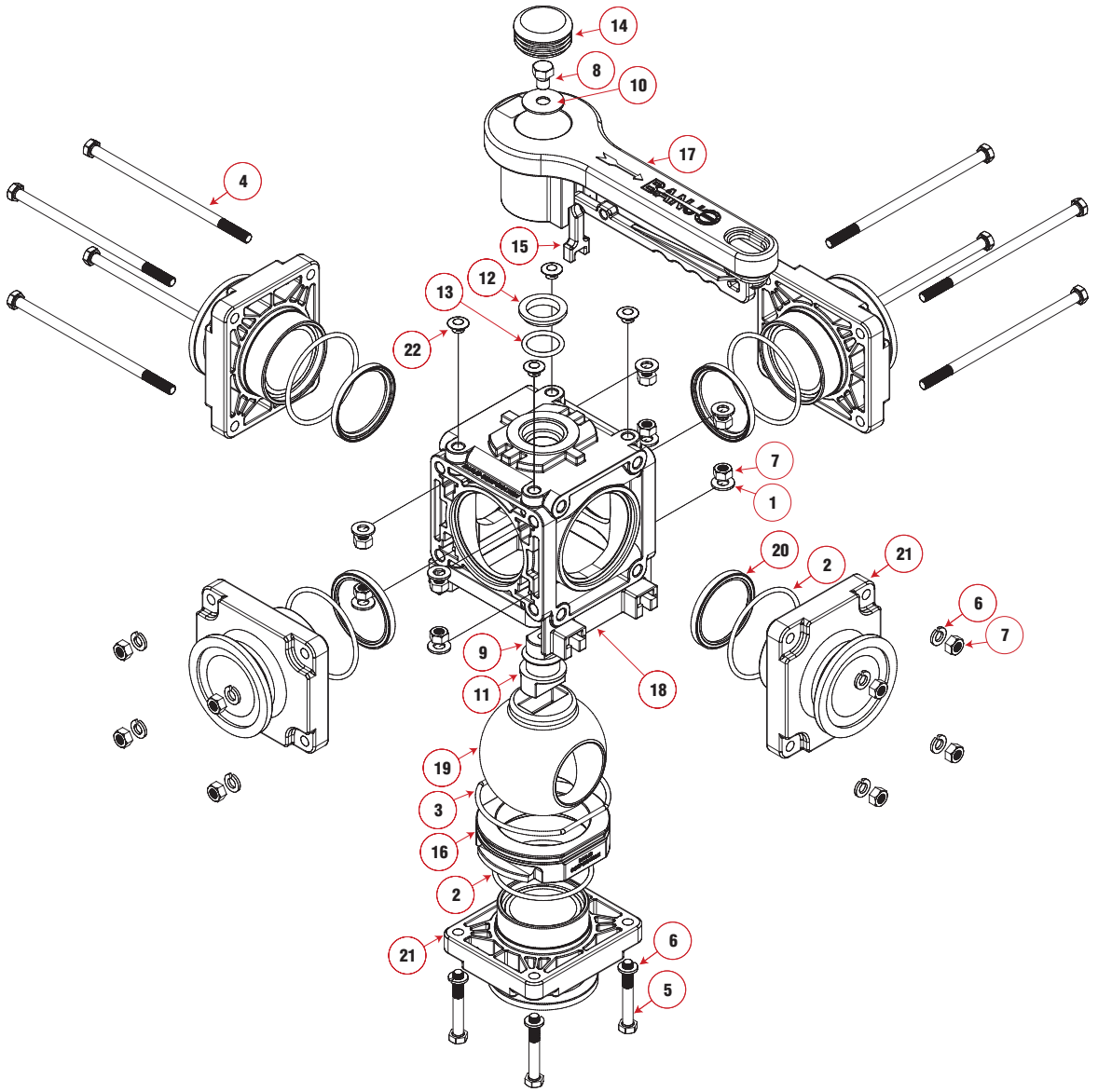

REPLACEMENT PARTS MV225CF				
ITEM	PART NO	DESCRIPTION	QTY	PRICE EA
1	12901	5/16" Flat Washer	8	
2	A232V	O-Ring FKM (viton type)	5	
3	A238V	O-Ring FKM (viton type)	1	
4	B0516650	5/16" - 18 x 6½" HHCS Bolt	8	
5	BF107	5/16" - 18 x 2¼" HHCS Bolt	4	
6	V10118	5/16" SS Lock Washer	12	
7	V10119	5/16" SS Nut	16	
8	V25020	#10 x ¾" SS Handle Bolt	1	
9	V25060	Thrust Washer	1	
10	V25121	SS Handle Washer	1	
11	V25151B	Stem	1	

REPLACEMENT PARTS MV225CF				
ITEM	PART NO	DESCRIPTION	QTY	PRICE EA
12	V25160	Upper Stem Bushing	1	
13	V25163	FKM (viton type) Stem O-Ring	1	
14	V25502	¾" Cap Plug	1	
15	V25503	Handle Locking Tab	1	
16	V25508	Spacer	1	
17	V25553AX	Handle	1	
18	V25554AX	Body	1	
19	V25555	Ball	1	
20	V25558D	TFE Seat	4	
21	V25578AX	Endplate	5	
22	PIP0716	Push in plug	4	

Manifold Valves
2" Standard Port Manifold "Stubby"™ Valve
PATENTED

FEATURES

- Stainless steel bolts.
- Glass reinforced polypropylene.
- Multiple design options.
- Unique patented compact design.
- Lightweight.
- Maximum operating pressure 100 P.S.I. @ 70°F. 75 P.S.I. @ 150°F.

VSMT200CF

VSF200CF

2" MANIFOLD STUBBY VALVES						
PART NO	DESCRIPTION	MAX PSI	PIPE SIZE	OPENING THRU BALL	QTY	PRICE EA
VSMT200CF	2" Flange x 2" Male NPT	100	2"	1½"	24/box	
VSF200CF	2" Flange x 2" Male Adapter	100	2"	1½"	24/box	

Manifold Valves
2" Full Port Manifold "Stubby"™ Valve
PATENTED

MVS220FP

MVS220CF

MVSF220FP

MVSMT220FP

2" FULL PORT MANIFOLD STUBBY VALVES						
PART NO	DESCRIPTION	MAX PSI	PIPE SIZE	OPENING THRU BALL	QTY	PRICE EA
MVS220FP	2" FP Flange x 2" Female NPT	100	2"	2"	8/box	
MVSF220FP	2" FP Flange x 2" Male Adapter	100	2"	2"	8/box	
MVS220CF	2" FP Flange x 2" FP Flange	100	2"	2"	8/box	
MVSMT220FP	2" FP Flange x 2" Male NPT	100	2"	2"	8/box	

For *faster* shipping, order in box quantities.

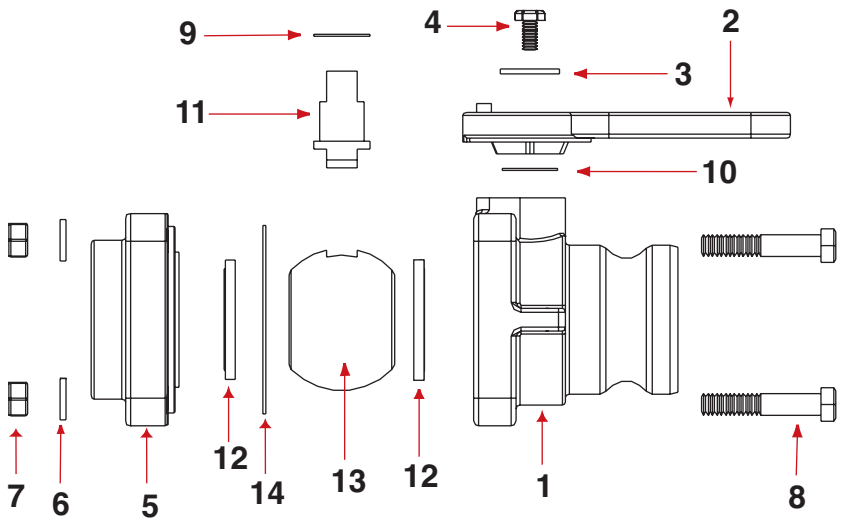

REPLACEMENT PARTS VSF200CF -VSMT200CF-MVS220FP-MVSF220FP-MVS220CF-MVSMT220FP				
ITEM	PART NO	DESCRIPTION	QTY	PRICE EA
3	V20021	Handle Washer	1	
4	V20020	Handle Bolt	1	
6	V20018	Lock Washer	4	
7	V20019	3/8" 16 SS Hex Nut	4	
8	V20010SS	Body Bolt	4	
9	V20060*	Upper Stem Bushing	1	
10	V20060*	Thrust Bearing	1	
11	VS20151	Stem	1	

REPLACEMENT PARTS VSF200CF-VSMT200CF				
ITEM	PART NO	DESCRIPTION	QTY	PRICE EA
1	VMT20254	2" Male NPT Body (VSMT200CF)	1	
1	VF20254	2" Male Quick Connect Body (VSF200CF)	1	
2	VS20152SH	2" Short Handle	1	
5	VS20294	2" Stubby End Plate	1	
12	VS20258A*	Seat	2	
13	VS20255*	Ball	1	
14	V21204*	Body Gasket	1	
N/S	VS20200	Repair Kit (Items with asterisk* are included)	1	

REPLACEMENT PARTS MVS220FP-MVSF220FP-MVS220CF-MVSMT220FP				
ITEM	PART NO	DESCRIPTION	QTY	PRICE EA
1	VFT25254	2" Full Port Female NPT Body (MVS200FP)	1	
1	VF25254	2" Full Port Male Adapter Body (MVSF220FP)	1	
1	MV25254	2" Full Port Manifold Body (MVS220CF & MVSMT220FP)	1	
2	VS25153	2" Full Port Stubby Handle	1	
5	VS25378	2" Stubby End Plate	1	
5	VSMT25356	2" FP Stubby End Plate (MVSMT220FP)	1	
12	VS25258AR1	Seat	2	
13	VS25255	Ball	1	
14	V25214V	FKM (viton type) Body Gasket	1	

Manifold Valves
2" Full Port Stainless Steel Manifold "Stubby"™ Valve
PATENTED

FEATURES
- Stainless steel bolts.
- Glass reinforced polypropylene.
- Multiple design options.
- Unique patented compact design.
- Lightweight.
- Maximum operating pressure 100 P.S.I. @ 70°F. 75 P.S.I. @ 150°F.

MVS220HSFP

MVSF220HSFP

MVSMT220HSFP

2" FULL PORT MANIFOLD STUBBY VALVES W/SS						
PART NO	DESCRIPTION	MAX PSI	PIPE SIZE	OPENING THRU BALL	QTY	PRICE EA
MVS220HSFP	2" FP Flange x 2" FP Flange w/ SS Ball, Stem & Handle	100	2"	2"	1	
MVSF220HSFP	2" FP Flange x 2" Male Adapter w/SS Ball, Stem & Handle	100	2"	2"	1	
MVSMT220HSFP	2" FP NPT x 2" Male Flange w/SS Ball, Stem & Handle	100	2"	2"	1	

FEATURES
- 100% PTFE ball seats.
- Unique compact design.
- All TFE seals. No elastomers.
- 1000 P.S.I. maximum

MVSF220SS

2" FULL PORT MANIFOLD STAINLESS STEEL STUBBY VALVES						
PART NO	DESCRIPTION	MAX PSI	PIPE SIZE	OPENING THRU BALL	QTY	PRICE EA
MVS220SS	2" FP Flange x 2" FP Flange Stainless Steel Stubby Valve	1000	2"	2"	1	
MVSF220SS	2" FP Flange x 2" Male Adapter Stainless Steel Stubby Valve	1000	2"	2"	1	
MVSMT220SS	2" FP Male NPT x 2" FP Flange Stainless Steel Stubby Valve	1000	2"	2"	1	

2" FULL PORT STAINLESS STEEL STUBBY VALVE						
PART NO	DESCRIPTION	MAX PSI	PIPE SIZE	OPENING THRU BALL	QTY	PRICE EA
VSFMT220SS	2" FP Male Adapter x 2" NPT Stainless Steel Stubby Valve	1000	2"	2"	1	

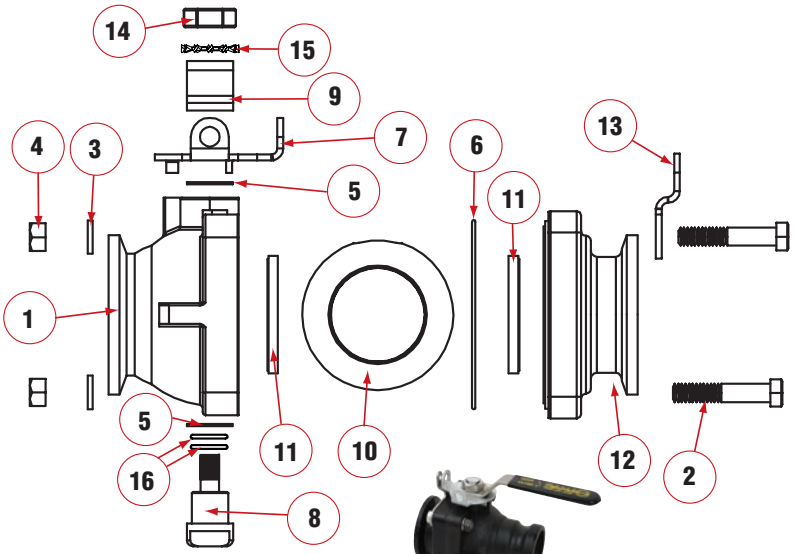

REPLACEMENT PARTS
MVS220HSFP

ITEM	PART NO	DESCRIPTION	QTY	PRICE EA
1	MV25254	2" Full Port Female NPT Body	1	
2	V20010SS	3/8" - 16 x 2" SS Bolt	4	
3	V20018	3/8" SS Lock Washer	4	
4	V20019	3/8" 16 SS Hex Nut	4	
5	V20060	Thrust Bearing	2	
6	V25214V	FKM (viton type) Body Gasket	1	
7	VS20101SS	Stainless Steel Handle Stop	1	
8	VS20151SS	Stainless Steel Stem	1	
9	VS25153SS	2" Stainless Steel Handle	2	
10	VS25255SS	Stainless Steel Ball	1	
11	VS25258AR1	Seat	1	
12	VS25378	2" Stubby End Plate	1	
13	VS20102SS	Stainless Steel Handle Lock	1	
14	VSS15020	Stainless Steel Handle Nut	1	
15	VS20021	Washer	1	
16	VS20163	FKM (viton type) Stem O-ring	2	

REPLACEMENT PARTS
MVSF220HSFP

ITEM	PART NO	DESCRIPTION	QTY	PRICE EA
1	VF25254	2" FP Male Adapter Body	1	
2	V20010SS	3/8" - 16 x 2" SS Bolt	4	
3	V20018	3/8" SS Lock Washer	4	
4	V20019	3/8" 16 SS Hex Nut	4	
5	V20060	Thrust Bearing	2	
6	V25214V	FKM (viton type) Body Gasket	1	
7	VS20101SS	Stainless Steel Handle Stop	1	
8	VS20151SS	Stainless Steel Stem	1	
9	VS25153SS	2" Stainless Steel Handle	2	
10	VS25255SS	Stainless Steel Ball	1	
11	VS25258AR1	Seat	1	
12	VS25378	2" Stubby End Plate	1	
13	VS20102SS	Stainless Steel Handle Lock	1	
14	VSS15020	Stainless Steel Handle Nut	1	
15	VS20021	Washer	1	
16	VS20163	FKM (viton type) Stem O-ring	2	

REPLACEMENT PARTS
MVSMT220HSFP

ITEM	PART NO	DESCRIPTION	QTY	PRICE EA
1	MV25254	2" Full Port Female NPT Body	1	
2	V20010SS	3/8" - 16 x 2" SS Bolt	4	
3	V20018	3/8" SS Lock Washer	4	
4	V20019	3/8" 16 SS Hex Nut	4	
5	V20060	Thrust Bearing	2	
6	V25214V	FKM (viton type) Body Gasket	1	
7	VS20101SS	Stainless Steel Handle Stop	1	
8	VS20151SS	Stainless Steel Stem	1	
9	VS25153SS	2" Stainless Steel Handle	2	
10	VS25255SS	Stainless Steel Ball	1	
11	VS25258AR1	Seat	1	
12	VSMT25356	2" Stubby End Plate	1	
13	VS20102SS	Stainless Steel Handle Lock	1	
14	VSS15020	Stainless Steel Handle Nut	1	
15	VS20021	Washer	1	
16	VS20163	FKM (viton type) Stem O-ring	2	

Manifold Valves
3" Manifold "Stubby"™ Valve

PATENTED

FEATURES

- Stainless steel bolts.
- Glass reinforced polypropylene.
- Multiple design options.
- Unique patented compact design.
- Lightweight.
- Maximum operating pressure 100 P.S.I. @ 70°F. 75 P.S.I. @ 150°F.

MVSF300

MVSF300FP

MVSMT300

3" MANIFOLD STUBBY VALVES						
PART NO	DESCRIPTION	MAX PSI	PIPE SIZE	OPENING THRU BALL	QTY	PRICE EA
MVSF300	3" Flange x 3" Male Adapter	100	3"	2½"	6/box	
MVSF300FP	3" Full Port Flange x 3" Male Adapter	100	3"	3"	1	
MVSMT300	3" Flange x 3" Male NPT	100	3"	2½"	6/box	

For *faster* shipping, order in box quantities.

MVS300CF

MVS300CFFP

3" MANIFOLD STUBBY VALVES						
PART NO	DESCRIPTION	MAX PSI	PIPE SIZE	OPENING THRU BALL	QTY	PRICE EA
MVS300CF	3" Flange x 3" Flange	100	3"	2½"	1/box	
MVS300CFFP	3" Full Port Flange x 3" Full Port Flange	100	3"	3"	1/box	

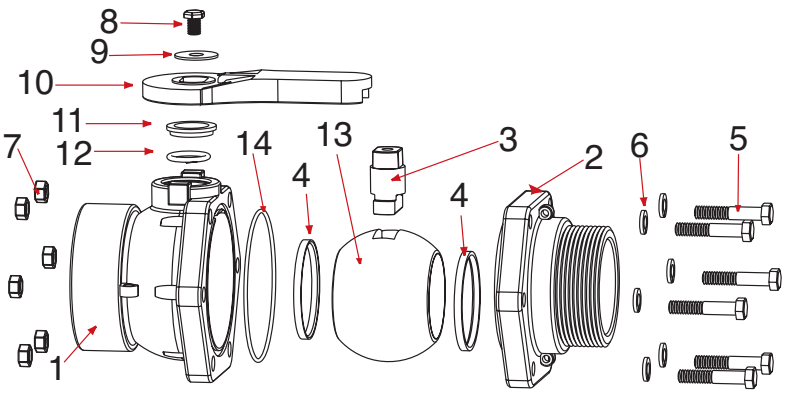

REPLACEMENT PARTS MVSF300-MVSF300FP-MVSMT300-MVS300CF-MVS300CFFP				
ITEM	PART NO	DESCRIPTION	QTY	PRICE EA
1	MVS30254	3" Stubby Body w/Manifold Flange	1	
3	VS25151B	Short Stem	1	
4	VS30258	3" Stubby Seat	2	
5	V20010SS	⅜" - 16 x 2" SS Bolt	6	
6	V20018	⅜" SS Lock Washer	6	
7	V20019	⅜" 16 SS Hex Nut	6	
8	V25020	⅜" x ½" Handle Bolt	1	
9	V25121	Handle Washer	1	
10	V25153	Handle-Straight	1	
11	V25160	Upper Stem Bushing	1	
12	V25163	FKM (viton type) Stem O-Ring	1	
13	VS30255	3" Ball	1	
14	V30265	FKM (viton type) Body O-Ring	1	

REPLACEMENT PARTS MVSF300FP				
ITEM	PART NO	DESCRIPTION	QTY	PRICE EA
1	VSF35254	3" FP Stubby Body	1	
2	VS35278	3" FP Stubby End Plate	1	
4	VS35258	3" Stubby Seat	2	
13	V35255A	3" Ball	1	
14	V35265	FKM (viton type) Body O-Ring	1	

REPLACEMENT PARTS MVSMT300				
ITEM	PART NO	DESCRIPTION	QTY	PRICE EA
2	VSMT30264	3" Stubby Male NPT End Plate	1	

REPLACEMENT PARTS MVS300CF				
ITEM	PART NO	DESCRIPTION	QTY	PRICE EA
2	VS30278	3" Stubby End Plate	1	

REPLACEMENT PARTS MVSF300				
ITEM	PART NO	DESCRIPTION	QTY	PRICE EA
2	VSF30264	3" Stubby F End Plate	1	

REPLACEMENT PARTS MVS300CFFP				
ITEM	PART NO	DESCRIPTION	QTY	PRICE EA
1	MVS35254	3" FP Stubby Body	1	
2	VS35278	3" FP Stubby End Plate	1	
3	V30151B	Stem	1	
4	VS35258	3" Stubby Seat	2	
13	V35255A	3" Ball	1	
14	V35265	FKM (viton type) Body O-Ring	1	

Manifold Valves
3" Full Port Stainless Steel Manifold "Stubby"™ Valve
PATENTED

FEATURES

- Stainless steel bolts.
- Glass reinforced polypropylene.
- Multiple design options.
- Unique patented compact design.
- Lightweight.
- Maximum operating pressure 100 P.S.I. @ 70°F. 75 P.S.I. @ 150°F.

MVS300HSFP

MVSF300HSFP

MVSMT300HSFP

3" FULL PORT MANIFOLD STUBBY VALVES W/SS						
PART NO	DESCRIPTION	MAX PSI	PIPE SIZE	OPENING THRU BALL	QTY	PRICE EA
MVS300HSFP	3" FP Flange x 3" FP Flange w/SS Ball, Stem & Handle	100	3"	3"	1/bx	
MVSF300HSFP	3" FP Flange x 3" Male Adapter w/SS Ball, Stem & Handle	100	3"	3"	1/bx	
MVSMT300HSFP	3" FP Flange x 3" Male NPT w/SS Ball, Stem & Handle	100	3"	3"	1/bx	

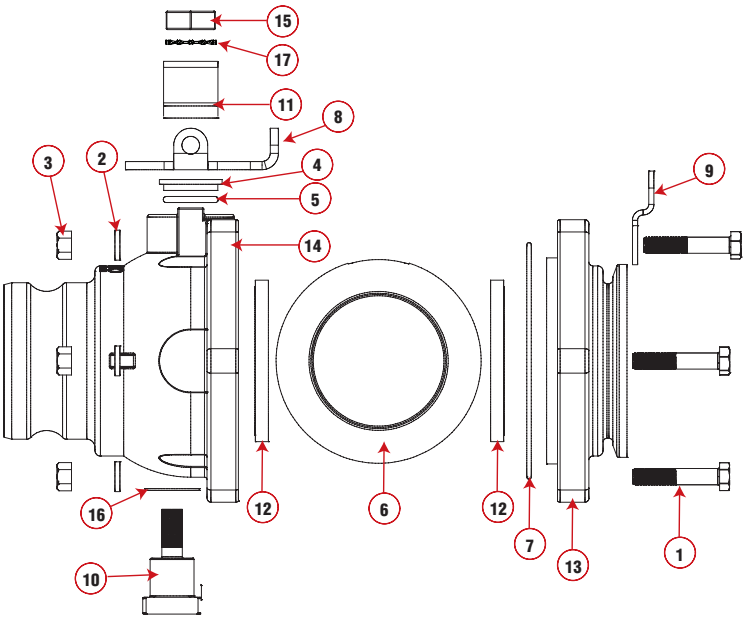

REPLACEMENT PARTS MVSF300HSFP-MVS300HSFP				
ITEM	PART NO	DESCRIPTION	QTY	PRICE EA
1	V20010SS	3/8" - 16 x 2" SS Bolt	6	
2	V20018	3/8" SS Lock Washer	6	
3	V20019	3/8" 16 SS Hex Nut	6	
4	V25160	Upper Stem Bushing	1	
5	V25163	FKM(viton type) O-Ring	1	
6	V35255ASS	Stainless Steel Ball	1	
7	V35265	FKM(viton type) Body O-Ring	1	
8	VS30101SS	SS Handle Stop	1	
9	VS30102SS	SS Handle Lock	1	
10	VS30151SS	SS Stem	1	
11	VS30153SS	Stainless Steel Handle	1	
12	VS35258	3" Stubby Seat	2	
13	VS35278	3" FP Stubby End Plate	1	
15	VSS30020	Stainless Steel Handle Nut	1	
16	V25060	Thrust Bearing	1	
17	VS30021	Washer	1	

REPLACEMENT PARTS MVSF300HSFP				
ITEM	PART NO	DESCRIPTION	QTY	PRICE EA
14	VSF35254	3" FP Stubby Body	1	

REPLACEMENT PARTS MVS300HSFP				
ITEM	PART NO	DESCRIPTION	QTY	PRICE EA
14	MVS35254	3" FP Stubby Body	1	

REPLACEMENT PARTS MVSMT300HSFP				
ITEM	PART NO	DESCRIPTION	QTY	PRICE EA
14	VSMT35256	3" FP Stubby Body	1	

3-Way Manifold Ball Valves

FEATURES

- Stainless steel bolts.
- Precision molded in polypropylene. Polypropylene is reinforced with fiberglass for additional strength.
- Self-aligning ball moves freely against the PTFE seats for smooth operation.
- The valve opens and closes with very little pressure on the handle.
- Ball is diamond turned, after molding, to make it spherically perfect, which provides precise contact between ball and seats.
- PTFE self-lubricating stem bushings and seats cannot stick or bind.
- Maximum operating pressure 100 P.S.I.
- FKM (viton type) seals.

MV100BL

MV200BL

MV220BL

4 BOLT BOTTOM LOAD MANIFOLD VALVES							
PART NO	DESCRIPTION	MAX PSI	FLANGE SIZE	OPENING THRU BALL	HANDLE TYPE	QTY	PRICE EA
MV100BL	1" Manifold Flanged Valve	100	1"	1"	T	18/box	
MV200BL	2" Manifold Flanged Valve	100	2"	1½"	T	12/box	
MV220BL	2" Full Port Manifold Flanged Valve	100	2"	2"	Straight	8/box	

BOTTOM LOAD: Directional flow right or left. Valve can be turned off to stop flow.

3" 3-WAY

MV300BL

6 BOLT BOTTOM LOAD MANIFOLD VALVES							
PART NO	DESCRIPTION	MAX PSI	FLANGE SIZE	OPENING THRU BALL	HANDLE TYPE	QTY	PRICE EA
MV300BL	3" Full Port Manifold Flanged Valve	100	3"	3"	Straight	4/box	

BOTTOM LOAD: Directional flow right or left. Valve can be turned off to stop flow.

For *faster* shipping, order in box quantities.

MANIFOLD FLANGE CONNECTIONS

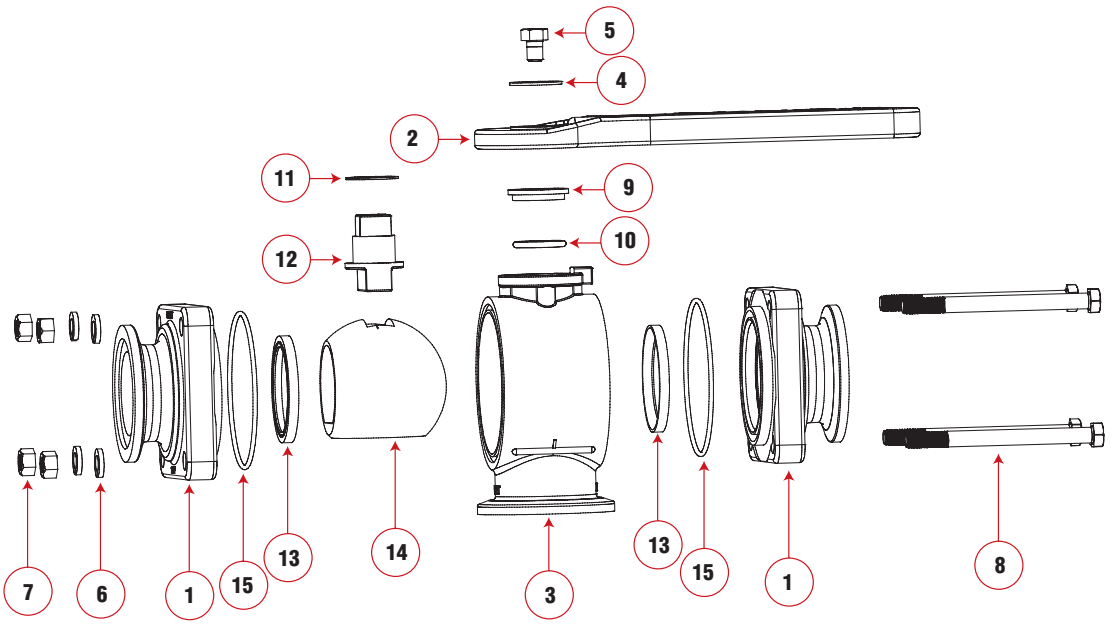

REPLACEMENT PARTS MV100BL

ITEM	PART NO	DESCRIPTION	QTY	PRICE EA
1	VE10278A	1" Manifold End Plate	2	
2	V10353TB	Handle	1	
3	MV10354B	1" Manifold Body	1	
4	V07021A	Handle Washer	1	
5	V10020A	Handle Bolt	1	
6	V10118	Lock Washer	4	
7	V10119	Body Nut	4	
8	V10117	Body Bolt	4	
9	V10159	Upper Stem Bushing	1	
10	V10163	FKM (viton type) Stem O-Ring	1	
11	V10060	Thrust Bushing	2	
12	V10151A	Stem	1	
13	VE10258A	Seat	2	
14	V10355B	Bottom Load Ball	1	
15	VE10264	Body O-Ring	2	
16	V20353C	Handle Cap	1	

REPLACEMENT PARTS MV220BL

ITEM	PART NO	DESCRIPTION	QTY	PRICE EA
1	V25378	2" Manifold End Plate	2	
2	V25353B	Straight Handle	1	
2	V25353TB	T Handle	1	
3	MV25354B	2" Manifold Body	1	
4	V25121	Handle Washer	1	
5	V25020	Handle Bolt	1	
6	V20018	Lock Washer	4	
7	V20019	3/8" 16 SS Hex Nut	4	
8	V25017	Body Bolt	4	
9	V25160	Upper Stem Bushing	1	
10	V25163	FKM (viton type) Stem O-Ring	1	
11	V25060	Thrust Bushing	1	
12	V25151B	Stem	1	
13	V25258	Seat	2	
14	V25355B	Bottom Load Ball	1	
15	V25264	Body O-Ring	2	

REPLACEMENT PARTS MV200BL

ITEM	PART NO	DESCRIPTION	QTY	PRICE EA
1	V20394	2" Manifold End Plate	2	
2	V20353TB	T Handle	1	
3	MV20354B	2" Manifold Body	1	
4	V20021	Handle Washer	1	
5	V20020	Handle Bolt	1	
6	V20018	Lock Washer	4	
7	V20019	3/8" 16 SS Hex Nut	4	
8	V20017	Body Bolt	4	
9	V20159	Upper Stem Bushing	1	
10	V20163	FKM (viton type) Stem O-Ring	1	
11	V20060	Thrust Bushing	1	
12	V20151M	Stem	1	
13	VE20258A	Seat	2	
14	V20355B	Bottom Load Ball	1	
15	VE20264	Body O-Ring	2	
16	V20353C	Handle Cap	1	

REPLACEMENT PARTS MV300BL

ITEM	PART NO	DESCRIPTION	QTY	PRICE EA
1	MV35278	3" Manifold End Plate	2	
2	V25353B	Straight Handle	1	
3	MV35254BL	3" Full Port Manifold Body	1	
4	V25121	Handle Washer	1	
5	V25020	Handle Bolt	1	
6	V20018	Lock Washer	6	
7	V20019	3/8" 16 SS Hex Nut	6	
8	V35018	Body Bolt	6	
9	V25160	Upper Stem Bushing	1	
10	V25163	FKM (viton type) Stem O-Ring	1	
11	V25060	Thrust Bushing	1	
12	V25151B	Stem	1	
13	V35258A	Seat	2	
14	V35255BL	Bottom Load Ball	1	
15	V35264BL	Body O-Ring	2	

Accessories for valves on page 12. If not listed, no optional handle is available.

3-Way Manifold Ball Valves

FEATURES

- Stainless steel bolts.
- Precision molded in polypropylene. Polypropylene is reinforced with fiberglass for additional strength.
- Self-aligning ball moves freely against the PTFE seats for smooth operation.
- The valve opens and closes with very little pressure on the handle.
- Ball is diamond turned, after molding, to make it spherically perfect, which provides precise contact between ball and seats.
- PTFE self-lubricating stem bushings and seats cannot stick or bind.
- Maximum operating pressure 100 P.S.I.
- FKM (viton type) seals.

MV100SL

MV200SL

MV220SL

MVT220SL

4 BOLT SIDE LOAD MANIFOLD VALVES							
PART NO	DESCRIPTION	MAX PSI	FLANGE SIZE	OPENING THRU BALL	HANDLE TYPE	QTY	PRICE EA
MV100SL	1" Manifold Flanged Valve	100	1"	1"	T	18/box	
MV200SL	2" Manifold Flanged Valve	100	2"	1½"	Straight	10/box	
MV220SL	2" Full Port Manifold Flanged Valve	100	2"	2"	Straight	8/box	
MVT220SL*	2" Full Port Manifold Flanged Valve	100	2"	2"	T	8/box	

SIDE LOAD: Directional flow right or left. Valve cannot be turned off.

* Non-Stock Item

For *faster* shipping, order in box quantities.

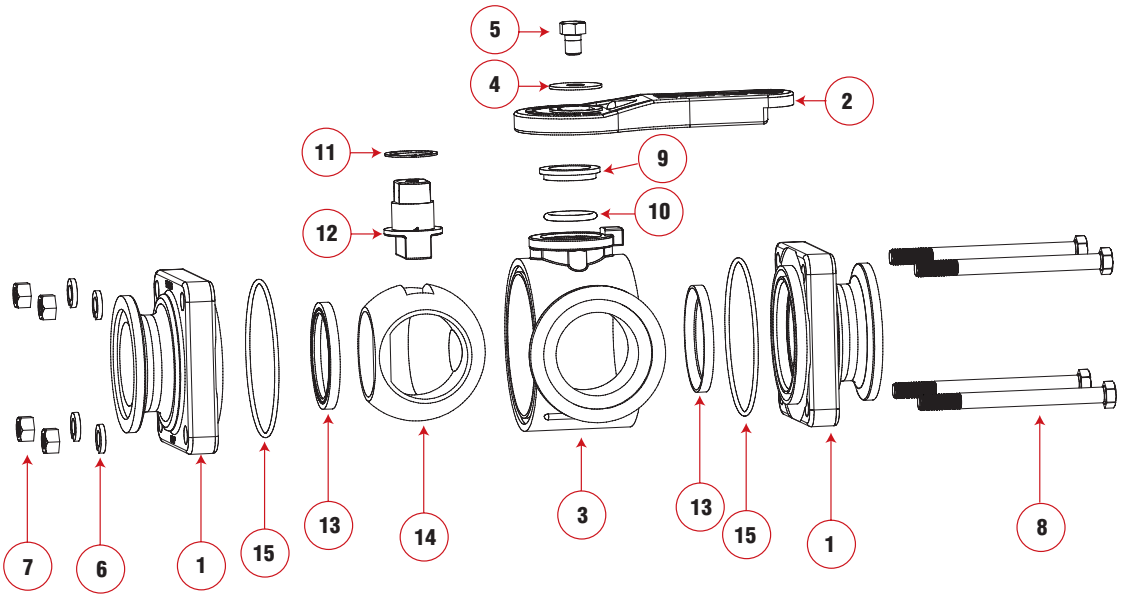

REPLACEMENT PARTS MV100SL				
ITEM	PART NO	DESCRIPTION	QTY	PRICE EA
1	VE10278A	1" Manifold End Plate	2	
2	V10353TS	T Handle	1	
3	MV10354S	1" Manifold Body	1	
4	V07021A	Handle Washer	1	
5	V10020A	Handle Bolt	1	
6	V10118	Lock Washer	4	
7	V10119	Body Nut	4	
8	V10117	Body Bolt	4	
9	V10159	Upper Stem Bushing	1	
10	V10163	FKM (viton type) Stem O-Ring	1	
11	V10060	Thrust Bushing	1	
12	V10151A	Stem	1	
13	VE10258A	Seat	2	
14	V10355S	Side Load Ball	1	
15	VE10264	Body O-Ring	2	
16	V20353C	Handle Cap	1	

REPLACEMENT PARTS MV200SL				
ITEM	PART NO	DESCRIPTION	QTY	PRICE EA
1	V20394	2" Manifold End Plate	2	
2	V20153SH	Straight Handle	1	
3	MV20354S	2" Manifold Body	1	
4	V20021	Handle Washer	1	
5	V20020	Handle Bolt	1	
6	V20018	Lock Washer	4	
7	V20019	3/8" 16 SS Hex Nut	4	
8	V20017	Body Bolt	4	
9	V20159	Upper Stem Bushing	1	
10	V20163	FKM (viton type) Stem O-Ring	1	
11	V20060	Thrust Bushing	1	
12	V20151M	Stem	1	
13	VE20258A	Seat	2	
14	V20355S	Side Load Ball	1	
15	VE20264	Body O-Ring	2	

REPLACEMENT PARTS MV220SL & MVT220SL				
ITEM	PART NO	DESCRIPTION	QTY	PRICE EA
1	V25378	2" Manifold End Plate	2	
2	V25153SH	Straight Handle	1	
2	V25353TS	T Handle (MVT220SL)	1	
3	MV25354S	2" Manifold Body	1	
4	V25121	Handle Washer	1	
5	V25020	Handle Bolt	1	
6	V20018	Lock Washer	4	
7	V20019	3/8" 16 SS Hex Nut	4	
8	V25017	Body Bolt	4	
9	V25160	Upper Stem Bushing	1	
10	V25163	FKM (viton type) Stem O-Ring	1	
11	V25060	Thrust Bushing	1	
12	V25151B	Stem	1	
13	V25258	Seat	2	
14	V25355S	Side Load Ball	1	
15	V25264	Body O-Ring	2	

Manifold Dry Disconnect

Patented Double Ball design with cam lever connection!

DRY MATE® patented

FEATURES

- Lightweight.
- Unrestricted flow.
- Minimal fluid spillage.
- Easy to use.
- Economical.
- Reduces risk of exposure.
- Wide range of chemical resistance.
- Cannot be uncoupled in open position.
- Handles cannot be opened after male and female are separated.
- 100 P.S.I. maximum operating pressure.

Note: Male & female sold separately. Replacement parts for 2" manifold Dry-Mate on page 91.

MALE FEMALE

2" MANIFOLD DRY DISCONNECT						
PART NO	DESCRIPTION	MAX PSI	FLANGE SIZE	OPENING THRU BALL	QTY	PRICE EA
DM200ACF	2" Flanged Male Dry-Mate w/ FKM (viton type) Seals	100	2"	1½"	1	
DM200DCF	2" Flanged Female Dry-Mate w/FKM (viton type) Seals	100	2"	1½"	1	

FEMALE MALE

3" MANIFOLD DRY DISCONNECT						
PART NO	DESCRIPTION	MAX PSI	FLANGE SIZE	OPENING THRU BALL	QTY	PRICE EA
DM300ACF	3" Flanged Male Dry-Mate w/ FKM(viton type) Seals	100	3"	3"	1	
DM300DCF	3" Flanged Female Dry-Mate w/ FKM(viton type) Seals	100	3"	3"	1	

Polypropylene Inductors

FEATURES

- Threaded or manifold ends.
- Glass reinforced polypropylene.
- 1½" & 2" sizes available.

Each venturi comes in two pieces:

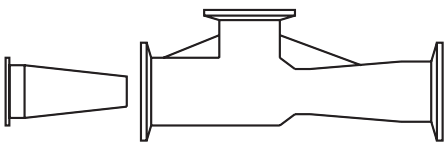

MHV200
MHV220A

HV150
HV200

NOTE: The inductor is designed for use with a volume pump. Typical volumes and pressures used to operate the venturi would be in the 80 to 240 US GPM range at pressures from 26 to 52 P.S.I.

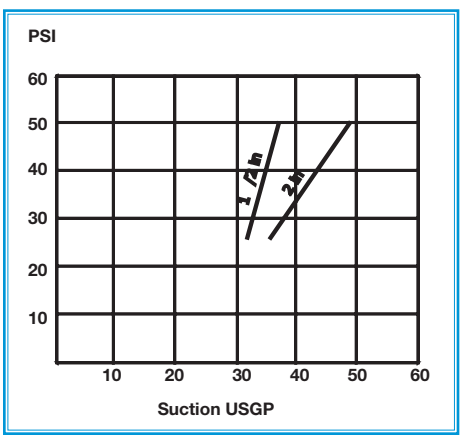

POLY INDUCTORS						
PART NO	DESCRIPTION	PRESSURE AT PUMP	VOLUME DRAW*	OPENING SIZE	QTY	PRICE EA
HV150	1½" MPT Poly Inductor	50 PSI	37 GPM	5/16"	1	
HV200	2" MPT Poly Inductor	50 PSI	49 GPM	7/16"	1	
MHV200	2" Manifold Poly Inductor with 1½" Port	50 PSI	37 GPM	5/16"	1	
MHV220A	2" FP Manifold Poly Inductor	50 PSI	49 GPM	9/16"	1	

*Note: US GPM. Tests done with water at ambient temperature. Pump used for test was a 2" Banjo (5 vane impeller) driven by a 5.5 hp Honda gas motor. Performance may vary depending on pump used & product being pumped.

Manifold Inductor System

FEATURES

- Installed after pump; suction completely empties inductor tank.
- Keeps tank free of chemicals.
- 2" & 3" full port flow.
- Easy assembly/installation with manifold connections.

*Note: Tank not included.

Draws wettable powders or liquids from inductor tank for thorough chemical mixing!

MANIFOLD INDUCTOR SYSTEM			
PART NO	DESCRIPTION	QTY	PRICE EA
MIS220	2" Full Port Flange x Flange-Assembled	1	
MIS300	3" Flange x Flange-Assembled	1	

Flanged fittings, clamps & gaskets on page 81.

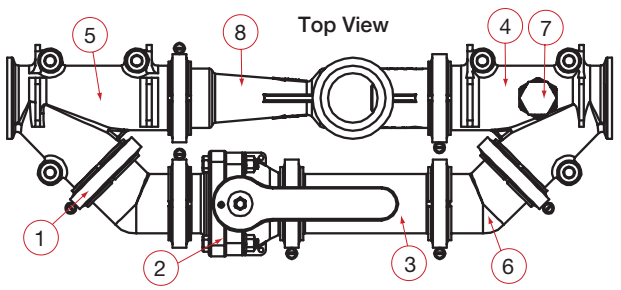

REPLACEMENT PARTS MIS220				
ITEM	PART NO	DESCRIPTION	QTY	PRICE EA
1	FC220	220 Series Worm Screw Clamp	10	
2	MVS220CF	2" FP Flange x 2" FP Flange	1	
3	M220CPG6	2" x 2" Full Port Flange x 6"	1	
4	M220YG45	2" Full Port 45° Y Flange w/ ¾" gauge port*	1	
5	M220Y45	2" Full Port 45° Y Flange	1	
6	M220CPG45	2" Full Port 45° Coupling	2	
7	PLUG075	¾" Pipe Plug	1	
8	MHV220A	2" Full Port Poly Venturi	1	
N/S	M221G	2" Full Port EPDM Manifold Gasket with **Rib**	7	

Note: *Gauge not included.

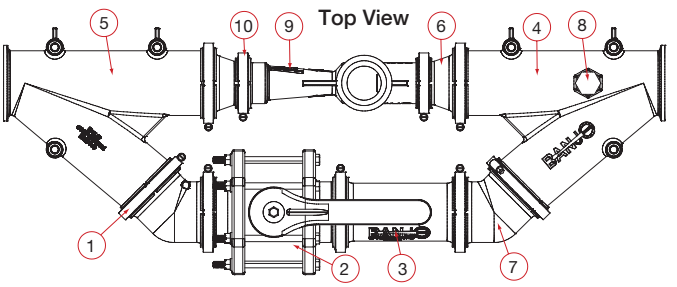

REPLACEMENT PARTS MIS300				
ITEM	PART NO	DESCRIPTION	QTY	PRICE EA
1	FC300	300 Series Worm Screw Clamp	7	
2	MV301CF	3" FP Flange x 3" FP Flange	1	
3	M300CPG7	3" x 3" Full Port Flange x 7"	1	
4	M300YG45	3" Full Port 45° Y Flange w/ ¾" gauge port*	1	
5	M300Y45	3" Full Port 45° Y Flange	1	
6	M300220CPG	3" x 2" Full Port Reducer Flange	1	
7	M300CPG45	3" Full Port 45° Coupling	2	
8	PLUG075	¾" Pipe Plug	1	
9	MHV220A	2" Full Port Poly Venturi	1	
10	FC220	220 Series Worm Screw Clamp	3	
N/S	M221G	2" Full Port EPDM Manifold Gasket with **Rib**	2	
N/S	M301G	3" EPDM Manifold Gasket with **Rib**	7	

Flow Meters

FEATURES

- Displays overall total volume & batch total volume!
- Flow rate allows for Gallons or Liters Per Minute.
- The display reads 6 digits for Rate, 8 digits for Total and 1 decimal place reading in tenths.
- Magnetic style meter with stainless steel electrodes.
- Self calibrating meter.
- Measures water and most conductive liquids*.
- Easy to change six (6) AA batteries.
- No moving parts to fail during use.
- Glass-reinforced polypropylene.
- Temperature range from 0°F to 150°F.
- Accuracy is 99% from 2 to 110 GPM for 1".
- Accuracy is 99% from 6 to 300 GPM for 2".
- Accuracy is 99% from 14 to 670 GPM for 3".
- There are 3 photoeyes located on the face of the flowmeter.
  Note: These are not push buttons, to activate you must hold your finger over the photoeye for 2-4 seconds.

** Will not read petroleum based liquids.*

FM100

110 GPM!

MFM100

670 GPM!

MFM300

300 GPM!

MFM220

FLOW METERS				
PART NO	DESCRIPTION	MAX PSI	QTY	PRICE EA
FM100	1" Full Port Female NPT Flow Meter	150	1	
MFM100	1" Full Port Manifold Flow Meter	150	1	
MFM220	2" Full Port Manifold Flow Meter	150	1	
MFM300	3" Full Port Manifold Flow Meter	150	1	

Note: It is recommended to have at least 10x the diameter of straight pipe before and after the flow meter.

Note: Please see Flange Clamps and Gaskets page 81.

Sweeps

Improved Flow for Max GPM!

FEATURES

- Direct replacement for standard 90° flanged couplings.
- Positive seals.
- Quick & easy assembly.
- Easy On/Off hose connections.
- 360° Orientation.
- 1" fittings pressure to 300 P.S.I. at 70°F.
- 2" fittings pressure to 200 P.S.I. at 70°F.
- 3" fittings pressure to 125 P.S.I. at 70°F.

M100125BRBSWP90

M100BRBSWP90

M100SWP90

M200SWP90

M220200SWP90

M220ASWP90

M220BRBSWP90

M220MPTSWP90

M220SWP90

M220SWP90SS

M300ASWP90

M300BRBSWP90

M300MPTSWP90

M300SWP90

M100125BRBSWPG90

M100BRBSWPG90

M100SWPG90

M300ASWPG90

M300MPTSWPG90

M300SWPG90

SWEEPS			
PART NO	DESCRIPTION	QTY	PRICE EA
M100125BRBSWP90	1" Flange x 1¼" Hose Shank Sweep	1	
M100BRBSWP90	1" Flange x Hose Shank Sweep	1	
M100SWP90	1" Flange x Flange Sweep	1	
M200SWP90	2" Flange x Flange Sweep	1	
M220200SWP90	2" Full Port Flange x 2" Flange Sweep	1	
M220ASWP90	2" Full Port Flange x Male Adapter Sweep	1	
M220BRBSWP90	2" Full Port Flange x Hose Shank Sweep	1	
M220MPTSWP90	2" Full Port Flange x Male NPT Thread Sweep	1	
M220SWP90	2" Full Port Flange x Flange Sweep	1	
M220SWP90SS	2" Full Port SS Flange x Flange Sweep	1	
M300ASWP90	3" Flange x Male Adapter Sweep	1	
M300BRBSWP90	3" Flange x Hose Shank Sweep	1	
M300MPTSWP90	3" Flange x Male NPT Thread Sweep	1	
M300SWP90	3" Flange x Flange Sweep	1	

SWEEPS w/Gauge Port			
PART NO	DESCRIPTION	QTY	PRICE EA
M100125BRBSWPG90	1" Full Port Flange x 1¼" Hose Shank Sweep w/ ¼" gauge port	1	
M100BRBSWPG90	1" Full Port Flange x 1" Hose Shank Sweep w/ ¼" gauge port	1	
M100SWPG90	1" Flange x Flange Sweep with ¼" gauge port	1	
M300ASWPG90	3" Flange x Male Adapter Sweep w/ ¼" gauge port	1	
M300MPTSWPG90	3" Flange x Male NPT Thread Sweep w/ ¼" gauge port	1	
M300SWPG90	3" Flange x Flange Sweep w/ ¼" gauge port	1	

Boom Nozzle Pipe Adapter

FEATURES

- Eliminates having to thread pipe.
- Quick and easy assembly.
- No welding necessary.
- 360° orientation.

BOOM NOZZLE PIPE ADAPTER			
PART NO	DESCRIPTION	QTY	PRICE EA
M100PA	1" Flanged Pipe Adapter	1	
M100PAC	1" Flanged Pipe Adapter Cap	1	
M100PAT	1" Flanged Pipe Adapter Tee	1	

Manifold Fittings

FEATURES

- Positive seals.
- Quick & easy assembly.
- Easy On/Off hose connections.
- 360° Orientation.
- 1" fittings pressure to 300 P.S.I. at 70°F.
- 2" fittings pressure to 200 P.S.I. at 70°F.
- 3" fittings pressure to 125 P.S.I. at 70°F.
- 4" fittings pressure to 150 P.S.I. at 70°F.

MANIFOLD SWIVEL				
PART NO	DESCRIPTION	MAX PSI	QTY	PRICE EA
MSW220	2" Full Port Manifold Flange Swivel	75	1	

FLANGE x PVC GLUE SOCKET FITTING			
PART NO	DESCRIPTION	QTY	PRICE EA
M101GSA	1" Manifold Flange x 1" PVC Glue Socket Fitting	1	
M221GSA	2" Manifold Full Port Flange x 2" PVC Glue Socket Fitting	1	
M301GSA	3" Manifold Full Port Flange x 3" PVC Glue Socket Fitting	1	

FLANGED POLY CHECK VALVES					
PART NO	DESCRIPTION	MAX PSI	FLOW	QTY	PRICE EA
MCV100	1" Flanged Poly Check Valve	150	1"	1	
MCV200	2" Flanged Poly Check Valve	150	1½"	1	
MCV221	2" Full Port Flanged Poly Check Valve	150	2"	1	
MCV300	3" Flanged Poly Check Valve	150	3"	1	

FLANGE x SOCKET WELD - 316SS			
PART NO	DESCRIPTION	QTY	PRICE EA
M100SWFSS	1" Flange x 1" Socket Weld Fitting	1	
M104SWFSS	1" Flange x 1" Socket Weld Fitting x 4"	1	
M200SWFSS	2" Flange x 2" Socket Weld Fitting	1	
M220SWFSS	2" Full Port Flange x 2" Socket Weld Fitting	1	
M220375SWFSS	2" Full Port Flange x 2" Socket Weld Fitting x3¾"	1	
M300SWFSS	3" Flange x 3" Socket Weld Fitting	1	
M300375SWFSS	3" Flange x 3" Socket Weld Fitting x 3 ¾"	1	

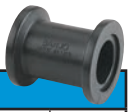

FLANGED COUPLINGS

PART NO	DESCRIPTION	QTY	PRICE EA
M100CPG	1" x 1" Flange x 2¼" Long	10/bag	
M200CPG	2" x 2" Flange x 4½" Long	10/bag	
M220CPG	2" x 2" Full Port Flange x 2 31/32"	10/bag	
M220CPG6	2" x 2" Full Port Flange x 6" Long	1	
M300CPG	3" x 3" Full Port Flange x 4" Long	1	
M300CPG7	3" x 3" Full Port Flange x 7" Long	1	

45° FLANGED COUPLINGS

PART NO	DESCRIPTION	QTY	PRICE EA
M100CPG45	1" x 1" 45° Flange	10/bag	
M200CPG45	2" x 2" 45° Flange	10/bag	
M220CPG45	2" x 2" 45° Full Port Flange	10/bag	
M300CPG45	3" x 3" 45° Full Port Flange	1	

90° FLANGED COUPLINGS

PART NO	DESCRIPTION	QTY	PRICE EA
M100CPG90	1" x 1" 90° Flange	10/bag	
M200CPG90	2" x 2" 90° Flange	1	
M200CPG90SH	2" x 2" 90° Short Flange	1	
M220CPG90	2" x 2" 90° Full Port Flange	1	
M300CPG90	3" x 3" 90° Full Port Flange	1	

45° Y FLANGED COUPLINGS

PART NO	DESCRIPTION	QTY	PRICE EA
M220Y45	2" Full Port 45° Y Flange	1	
M200YG45	2" 45° Y Flange w/ ¾" gauge port*	1	
M220YG45	2" Full Port 45° Y Flange w/ ¾" gauge port*	1	
M300Y45	3" Full Port 45° Y Flange	1	
M300YG45	3" Full Port 45° Y Flange w/ ¾" gauge port*	1	

Note: *Gauge not included.

Please order in bag/box quantities for quick and easy shipping and receiving of your order. All items priced each, not per bag or box quantity.

FLANGED REDUCER COUPLINGS

PART NO	DESCRIPTION	QTY	PRICE EA
M200100CPG	2" Port x 1" Reducer Flange	10/bag	
M220100CPG	2" Full Port x 1" Reducer Flange	10/bag	
M220200CPG	2" Full Port x 2" Reducer Flange	10/bag	
M300200CPG	3" x 2" Port Reducer Flange	1	
M300220CPG	3" x 2" Full Port Reducer Flange	1	

FLANGED TEE

PART NO	DESCRIPTION	QTY	PRICE EA
M100TEE	1" Flanged Tee	10/bag	
M101TEE	1" Flanged Tee - Long	10/bag	
M200100TEE	2" Port x 1" Flanged Tee	1	
M200TEE	2" Port Flanged Tee	1	
M200100TEEB	2" x 1" Port Flanged Tee w/Mounting Bracket	1	
M220100TEE	2" Full Port Flanged Tee x 1" Flanged Tee	1	
M220200TEE	2" Full Port Flanged Tee x 2" Flanged Tee	1	
M220TEE	2" Full Port Flanged Tee	1	
M300TEE	3" Flanged Tee	1	

U BOLTS-SS

PART NO	DESCRIPTION	QTY	PRICE EA
UB100	100 Series Mounting U Bolt	1	
UB202	200 Series Mounting U Bolt	1	
UB220	220 Series Mounting U Bolt	1	

MANIFOLD BUTT WELD ADAPTER

PART NO	DESCRIPTION	QTY	PRICE EA
M220BWASS	2" Full Port Stainless Steel Manifold Butt Weld Adapter	1	

BUTT WELD PIPE SWEEP

PART NO	DESCRIPTION	QTY	PRICE EA
BW220SWP90SS	2"90° Full Port Stainless Steel Butt Weld Pipe Sweep	1	.

Manifold Fittings

FEATURES

- Positive seals.
- Quick & easy assembly.
- Easy On/Off hose connections.
- 360° Orientation.
- 1" fittings pressure to 300 P.S.I. at 70°F.
- 2" fittings pressure to 200 P.S.I. at 70°F.
- 3" fittings pressure to 125 P.S.I. at 70°F.
- 4" fittings pressure to 150 P.S.I. at 70°F.

Please order in bag/box quantities for quick and easy shipping and receiving of your order. All items priced each, not per bag or box quantity.

FLANGE x MALE BSP(BRITISH STANDARD PIPE)

PART NO	DESCRIPTION	QTY	PRICE EA
M100BSP	1" Manifold Flange x 1" Male BSP	10/bag	
M200BSP	2" Manifold Flange x 2" Male BSP	10/bag	
M220BSP	2" Full Port Manifold Flange x 2" Male BSP	10/bag	
M300BSP	3" Full Port Manifold Flange x 3" Male BSP	1	

FLANGE x FEMALE NPT THREAD

PART NO	DESCRIPTION	QTY	PRICE EA
M100050FPT	1" Flange x ½" Pipe Thread	10/bag	
M100075FPT	1" Flange x ¾" Pipe Thread	10/bag	
M100FPT	1" Flange x 1" Pipe Thread	10/bag	
M200FPT	2" Flange x 2" Pipe Thread	10/bag	
M220FPT	2" Full Port Flange x 2" Pipe Thread	10/bag	
M300FPT	3" Flange x 3" Pipe Thread	1	

FLANGE x NPT THREAD

PART NO	DESCRIPTION	QTY	PRICE EA
M100075MPT	1" Flange x ¾" Male Thread	10/bag	
M100MPT	1" Flange x 1" Male Thread	10/bag	
M100125MPT	1" Flange x 1¼" Male Thread	10/bag	
M200125MPT	2" Flange x 1¼" Male Thread	10/bag	
M200150MPT	2" Flange x 1½" Male Thread	10/bag	
M200MPT	2" Flange x 2" Male Thread	10/bag	
M220MPT	2" Full Port Flange x 2" Male Thread	10/bag	
M300MPT	3" Flange x 3" Male Thread	1	

FLANGE x MALE NPT THREAD -316SS

PART NO	DESCRIPTION	QTY	PRICE EA
M100MPTSS	1" Flange x 1" Male Thread	1	
M200125MPTSS	2" Flange x 1¼" Male Thread	1	
M200150MPTSS	2" Flange x 1½" Male Thread	1	
M200MPTSS	2" Flange x 2" Male Thread	1	
M220150MPTSS	2" Full Port Flange x 1½" Male Thread	1	
M220MPTSS	2" Full Port Flange x 2" Male Thread	1	
M300220MPTSS	3" Flange x 2" Full Port Male Thread	1	
M300MPTSS	3" Flange x 3" Male Thread	1	

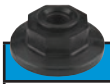

FLANGE PLUGS (SOLID & W/GAUGE PORT)

PART NO	DESCRIPTION	QTY	PRICE EA
M100PLG	1" Flange Plug	10/bag	
M200PLG	2" Flange Plug	10/bag	
M220PLG	2" Full Port Flange Plug	10/bag	
M300PLG	3" Flange Plug	10/bag	
M100PLG025	1" Flange Plug with ¼" FPT	10/bag	
M100PLG050	1" Flange Plug with ½" FPT	10/bag	
M200PLG018	2" Flange Plug with ⅛" FPT	10/bag	
M200PLG025	2" Flange Plug with ¼" FPT	10/bag	
M200PLG038	2" Flange Plug with ⅜" FPT	10/bag	
M200PLG050	2" Flange Plug with ½" FPT	10/bag	
M200PLG075	2" Flange Plug with ¾" FPT	1	
M200PLG100	2" Flange Plug with 1" FPT	10/bag	
M220PLG038	2" Full Port Flange Plug with ⅜" FPT	10/bag	
M220PLG075	2" Full Port Flange Plug with ¾" FPT	10/bag	
M300PLG075	3" Flange Plug with ¾" FPT	10/bag	
M300PLG100	3" Flange Plug with 1" FPT	1	

FLANGE x FEMALE QDC

PART NO	DESCRIPTION	QTY	PRICE EA
M220D	2" Full Port Flange x 2" Female Coupler	1	
M303D	3" Full Port Flange x 3" Female Coupler w/3 Arms	1	

FLANGE x MALE QDC

PART NO	DESCRIPTION	QTY	PRICE EA
M100A	1" Flange x 1" Male Adapter	10/bag	
M200A	2" Flange x 2" Male Adapter	10/bag	
M220A	2" Full Port Flange x 2" Male Adapter	10/bag	
M300A	3" Full Port Flange x 3" Male Adapter	1	

FLANGE x HOSE BARB

PART NO	DESCRIPTION	QTY	PRICE EA
M100075BRB	1" Flange x ¾" Hose Barb	10/bag	
M100BRB	1" Flange x 1" Hose Barb	10/bag	
M100125BRB	1" Flange x 1¼" Hose Barb	10/bag	
M200100BRB	2" Flange x 1" Hose Barb	10/bag	
M200125BRB	2" Flange x 1¼" Hose Barb	10/bag	
M200150BRB	2" Flange x 1½" Hose Barb	10/bag	
M200BRB	2" Flange x 2" Hose Barb	10/bag	
M220100BRB	2" Full Port Flange x 1" Hose Barb	10/bag	
M220125BRB	2" Full Port Flange x 1¼" Hose Barb	10/bag	
M220150BRB	2" Full Port Flange x 1½" Hose Barb	10/bag	
M220250BRB	2" Full Port Flange x 2½" Hose Barb	1	
M220BRB	2" Full Port Flange x 2" Hose Barb	10/bag	
M300220BRB	3" Flange x 2" Hose Barb	1	
M300BRB	3" Flange x 3" Hose Barb	1	

MANIFOLD FLANGE CONNECTIONS

FLANGE x 90° HOSE BARB ELBOW

PART NO	DESCRIPTION	QTY	PRICE EA
M100075BRB90	1" Flange x ¾" 90° Hose Barb Elbow	10/bag	
M100BRB90	1" Flange x 1" 90° Hose Barb Elbow	10/bag	
M100125BRB90	1" Flange x 1¼" 90° Hose Barb Elbow	10/bag	
M100150BRB90	1" Flange x 1½" 90° Hose Barb Elbow	10/bag	
M200100BRB90	2" Flange x 1" 90° Hose Barb Elbow	10/bag	
M200125BRB90	2" Flange x 1¼" 90° Hose Barb Elbow	10/bag	
M200150BRB90	2" Flange x 1½" 90° Hose Barb Elbow	10/bag	
M200BRB90	2" Flange x 2" 90° Hose Barb Elbow	1	
M220150BRB90	2" Full Port Flange x 1½" 90° Hose Barb Elbow	1	
M220BRB90	2" Full Port Flange x 2" 90° Hose Barb Elbow	1	
M300220BRB90	3" Flange x 2" 90° Hose Barb Elbow	1	
M300BRB90	3" Flange x 3" 90° Hose Barb Elbow	1	

FLANGE x 45° HOSE BARB ELBOW

PART NO	DESCRIPTION	QTY	PRICE EA
M100BRB45	1" Flange x 1" 45° Hose Barb Elbow	10/bag	
M200BRB45	2" Flange x 2" 45° Hose Barb Elbow	1	
M220BRB45	2" Full Port Flange x 2" 45° Hose Barb Elbow	1	
M300BRB45	3" Flange x 3" 45° Hose Barb Elbow	1	

FLANGE x 45° HOSE BARB ELBOW

PART NO	DESCRIPTION	QTY	PRICE EA
M200150BRB45	2" Flange x 1½" 45° Hose Barb Elbow	10/bag	

FLANGE x HOSE BARB TEE

PART NO	DESCRIPTION	QTY	PRICE EA
M100100HBT	1" Flange x 1" Hose Barb Tee	10/bag	
M100125HBT	1" Flange x 1¼" Hose Barb Tee	1	
M220200HBT	2" Full Port Flange x 2" Hose Barb Tee	1	
M300300HBT	3" Flange x 3" Hose Barb Tee	1	

FLANGED CROSS

PART NO	DESCRIPTION	QTY	PRICE EA
M100CR	1" Flanged Cross	10/bag	
M200CR	2" Flanged Cross	1	
M220CR	2" Full Port Flanged Cross	1	
M220CRSS	2" Full Port SS Flanged Cross	1	
M300CR	3" Flanged Cross	1	

For Heavy duty use!

BOLTED FLANGE CLAMPS

PART NO	DESCRIPTION	TORQUE	QTY	PRICE EA
FC220B	2" Full Port Bolted Flange Clamp	150 in/lbs	1	
FC300B	3" Bolted Flange Clamp	150 in/lbs	1	

T-Bolt

T-BOLT FLANGE CLAMPS

PART NO	DESCRIPTION	TORQUE	QTY	PRICE EA
FC220TB	2" Full Port Hi-Torque T-Bolt Flange Clamp	125 in/lbs	10/bag	
FC300TB	3" Full Port Hi-Torque T-Bolt Flange Clamp	125 in/lbs	10/bag	

FLANGE CLAMPS

PART NO	DESCRIPTION	TORQUE	QTY	PRICE EA
FC100	100 Series Worm Screw Clamp	50-60 in/lbs	10/bag	
FC200	200 Series Worm Screw Clamp	90-100 in/lbs	10/bag	
FC220	220 Series Worm Screw Clamp	90-100 in/lbs	10/bag	
FC300	300 Series Worm Screw Clamp	90-100 in/lbs	10/bag	

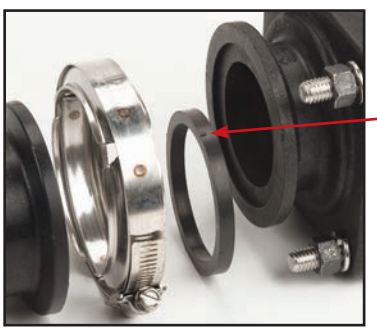

Rib keeps gasket in place during assembly.

FLANGE GASKETS

PART NO	DESCRIPTION	QTY	PRICE EA
M100G	1" EPDM Manifold Gasket	1	
M101G*	1" EPDM Manifold Gasket with **Rib**	1	
M100GV	100 Series FKM (viton type) Gasket	1	
150G	1½" EPDM Gasket	1	
150GV	200 Series FKM (viton type) Gasket	1	
200G	220 Series Full Port EPDM Gasket	1	
200GV	220 Series Full Port FKM (viton type) Gasket	1	
M201G*	2" EPDM Manifold Gasket with **Rib**	1	
M221G*	2" Full Port EPDM Manifold Gasket with **Rib**	1	
300G	3" EPDM Gasket	1	
300GV	300 Series FKM (viton type) Gasket	1	
M301G*	3" EPDM Manifold Gasket with **Rib**	1	

Manifold T Line Strainers

FEATURES

- EPDM gaskets.
- 316 stainless steel screens.
- 150 P.S.I. maximum.

1" MANIFOLD T LINE STRAINERS				
PART NO	DESCRIPTION	MAX PSI	QTY	PRICE EA
MLST100-16	1" Manifold T Strainer w/16 Mesh Screen	150	1	
MLST100-30	1" Manifold T Strainer w/30 Mesh Screen	150	1	
MLST100-50	1" Manifold T Strainer w/50 Mesh Screen	150	1	
MLST100-80	1" Manifold T Strainer w/80 Mesh Screen	150	1	
MLST100-100	1" Manifold T Strainer w/100 Mesh Screen	150	1	

2" MANIFOLD T LINE STRAINERS				
PART NO	DESCRIPTION	MAX PSI	QTY	PRICE EA
MLST150-16	2" Manifold T Strainer w/16 Mesh Screen	150	1	
MLST150-30	2" Manifold T Strainer w/30 Mesh Screen	150	1	
MLST150-50	2" Manifold T Strainer w/50 Mesh Screen	150	1	
MLST150-80	2" Manifold T Strainer w/80 Mesh Screen	150	1	
MLST150-100	2" Manifold T Strainer w/100 Mesh Screen	150	1	

Manifold Y Line Strainers

FEATURES

- EPDM gaskets.
- 316 stainless steel screens.
- 150 P.S.I. maximum.

1" MANIFOLD Y LINE STRAINERS				
PART NO	DESCRIPTION	MAX PSI	QTY	PRICE EA
MLS100-20	1" Manifold Y Strainer w/20 Mesh Screen	150	1	
MLS100-40	1" Manifold Y Strainer w/40 Mesh Screen	150	1	
MLS100-50	1" Manifold Y Strainer w/50 Mesh Screen	150	1	
MLS100-80	1" Manifold Y Strainer w/80 Mesh Screen	150	1	

FEATURES

- EPDM gaskets.
- 316 stainless steel screens.
- 150 P.S.I. maximum.

2" MANIFOLD Y LINE STRAINERS				
PART NO	DESCRIPTION	MAX PSI	QTY	PRICE EA
MLS200-06	2" Manifold Y Strainer w/6 Mesh Screen	150	1	
MLS200-12	2" Manifold Y Strainer w/12 Mesh Screen	150	1	
MLS200-20	2" Manifold Y Strainer w/20 Mesh Screen	150	1	
MLS200-30	2" Manifold Y Strainer w/30 Mesh Screen	150	1	
MLS200-50	2" Manifold Y Strainer w/50 Mesh Screen	150	1	
MLS200-50M	2" Manifold Y Strainer w/Mounting Bracket w/50 Mesh Screen	150	1	
MLS200-80	2" Manifold Y Strainer w/80 Mesh Screen	150	1	
MLS200-100	2" Manifold Y Strainer w/100 Mesh Screen	150	1	
MLS200-120	2" Manifold Y Strainer w/120 Mesh Screen	150	1	

MANIFOLD FLANGE CONNECTIONS

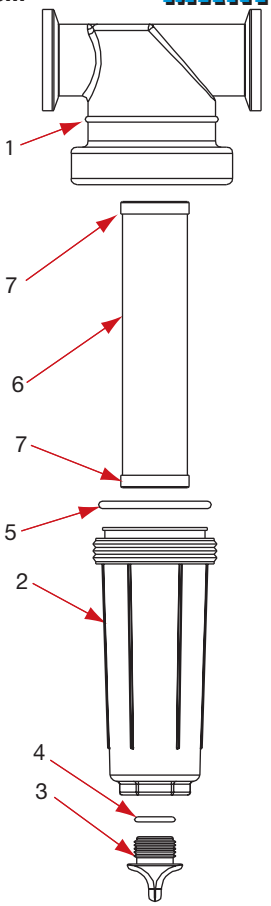

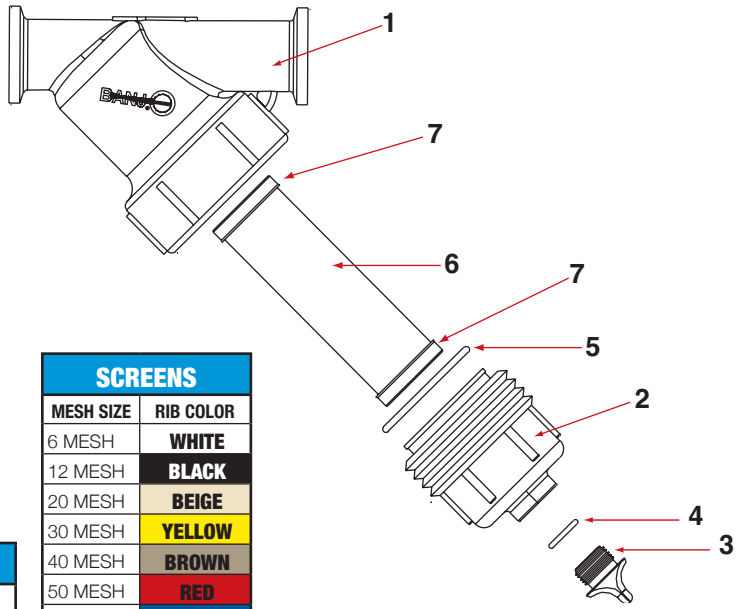

SCREENS	
MESH SIZE	RIB COLOR
16 MESH	GRAY
30 MESH	YELLOW
50 MESH	RED
80 MESH	BLUE
100 MESH	GREEN

SCREENS	
MESH SIZE	RIB COLOR
6 MESH	WHITE
12 MESH	BLACK
20 MESH	BEIGE
30 MESH	YELLOW
40 MESH	BROWN
50 MESH	RED
80 MESH	BLUE
100 MESH	GREEN
120 MESH	BLACK

REPLACEMENT PARTS MLST100

ITEM	PART NO	DESCRIPTION	QTY	PRICE EA
1	MLST100-H	1" Flanged T Strainer Head	1	
N/S	MLST100-HB	1" Flanged T Strainer (Includes 1-5)	1	
2	LST100-B	1" Flanged T Strainer Bowl, Drain Plug & O-Ring	1	
3	12777	½" Plug	1	
4	UV15163	1" Flanged T Strainer O-Ring	1	
5	LST100-G	1" EPDM Gasket	1	
5	LST100-GV	1" FKM (viton type) Gasket	1	
6	LST116	16 Mesh Screen	1	
6	LST130	30 Mesh Screen	1	
6	LST150	50 Mesh Screen	1	
6	LST180	80 Mesh Screen	1	
6	LST1100	100 Mesh Screen	1	
7	13778	O-Ring	2	

REPLACEMENT PARTS MLS100

ITEM	PART NO	DESCRIPTION	QTY	PRICE EA
1	MLS100B	1" Y Strainer Body	1	
N/S	MLS100BC	1" Y Strainer Assembly (Includes items 1-5)	1	
2	LS100-C1	1" Y Strainer Cap, Drain Plug & O-Ring	1	
3	12777	½" Plug	1	
4	UV15163	1" Flanged Y Strainer O-Ring	1	
5	LS100-G	1" EPDM Gasket	1	
6	LS120	20 Mesh Screen	1	
6	LS140	40 Mesh Screen	1	
6	LS150	50 Mesh Screen	1	
6	LS180	80 Mesh Screen	1	
7	LS125G	1" EPDM O-Ring for Screen	2	

REPLACEMENT PARTS MLST150

ITEM	PART NO	DESCRIPTION	QTY	PRICE EA
1	MLST150-H	1½" Flanged T Strainer Head	1	
N/S	MLST150-HB	1½" Flanged T Strainer (Includes 1-5)	1	
2	LST150-B	1½" Flanged T Strainer Bowl, Drain Plug&O-Ring	1	
3	LSQ200-PL	1½" Flanged T Strainer Plug	1	
4	LSQ200-R	1½" Flanged T Strainer O-Ring	1	
5	LST150-G	1½" EPDM Gasket	1	
5	LST150-GV	1½" FKM (viton type) Gasket	1	
6	LST1516	16 Mesh Screen	1	
6	LST1530	30 Mesh Screen	1	
6	LST1550	50 Mesh Screen	1	
6	LST1580	80 Mesh Screen	1	
6	LST15100	100 Mesh Screen	1	
7	LST034G	1½" EPDM O-Ring for Screen	2	

REPLACEMENT PARTS MLS200

ITEM	PART NO	DESCRIPTION	QTY	PRICE EA
1	MLS200B	2" Y Strainer Body	1	
N/S	MLS200BC	2" Y Strainer Assembly (Includes items 1-5)	1	
2	LS150-C	2" Y Strainer Cap, Drain Plug & O-Ring	1	
3	LSQ200-PL	2" Flanged Y Strainer Plug	1	
4	LSQ200-R	2" Flanged Y Strainer O-Ring	1	
5	LS150-G	2" EPDM Gasket	1	
5	LS150-GV	2" FKM (viton type) Gasket	1	
6	LS206	6 Mesh Screen	1	
6	LS212	12 Mesh Screen	1	
6	LS220	20 Mesh Screen	1	
6	LS230	30 Mesh Screen	1	
6	LS250	50 Mesh Screen	1	
6	LS280	80 Mesh Screen	1	
6	LS2100	100 Mesh Screen	1	
6	LS2120	120 Mesh Screen	1	
6	LS2150	150 Mesh Screen	1	
7	LS141G	2" EPDM O-Ring for Screen	2	

Manifold Y Line Strainers

FEATURES

- EPDM gaskets.
- 316 stainless steel screens.
- 150 P.S.I. maximum.

Easy off threaded strainer ring!

2" FULL PORT MANIFOLD Y LINE STRAINERS				
PART NO	DESCRIPTION	MAX PSI	QTY	PRICE EA
MLS222-04	2" Full Port Manifold Y Strainer w/4 Mesh Screen	150	1	
MLS222-06	2" Full Port Manifold Y Strainer w/6 Mesh Screen	150	1	
MLS222-08	2" Full Port Manifold Y Strainer w/8 Mesh Screen	150	1	
MLS222-10	2" Full Port Manifold Y Strainer w/10 Mesh Screen	150	1	
MLS222-16	2" Full Port Manifold Y Strainer w/16 Mesh Screen	150	1	
MLS222-30	2" Full Port Manifold Y Strainer w/30 Mesh Screen	150	1	
MLS222-50	2" Full Port Manifold Y Strainer w/50 Mesh Screen	150	1	
MLS222-80	2" Full Port Manifold Y Strainer w/80 Mesh Screen	150	1	
MLS222-100	2" Full Port Manifold Y Strainer w/100 Mesh Screen	150	1	

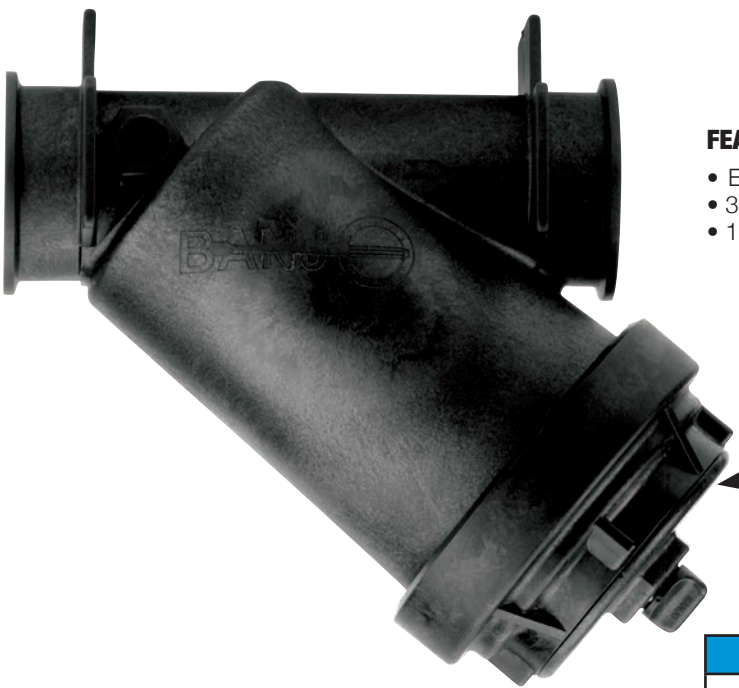

FEATURES

- EPDM gaskets.
- 304 stainless steel screens.
- 100 P.S.I. maximum.

Threaded end cap to remove screen!

3" MANIFOLD Y LINE STRAINERS				
PART NO	DESCRIPTION	MAX PSI	QTY	PRICE EA
MLS300-04	3" Manifold Y Strainer w/4 Mesh Screen	100	1	
MLS300-08	3" Manifold Y Strainer w/8 Mesh Screen	100	1	
MLS300-12	3" Manifold Y Strainer w/12 Mesh Screen	100	1	
MLS300-20	3" Manifold Y Strainer w/20 Mesh Screen	100	1	
MLS300-50	3" ManifoldY Strainer w/50 Mesh Screen	100	1	

***WARNING**: 3" Polypropylene "Y" Strainer to be used on suction side or non-pressure side in all applications.

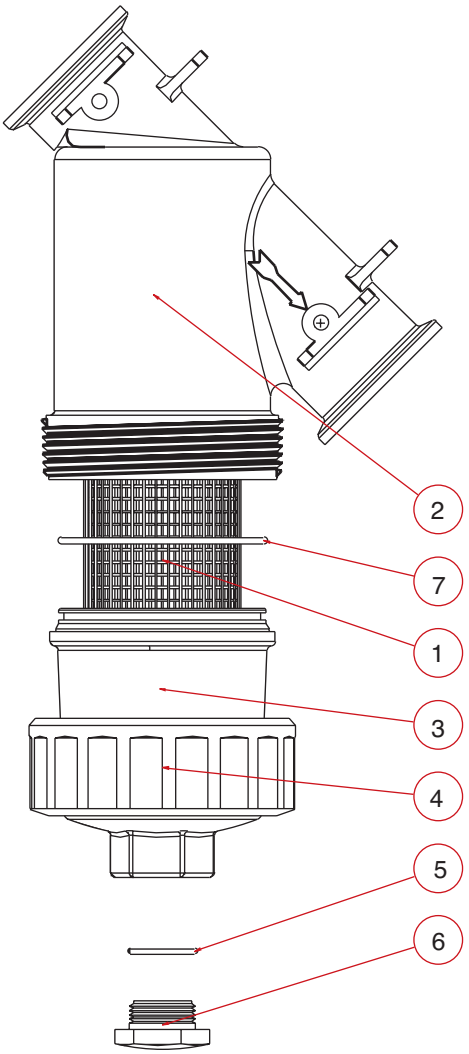

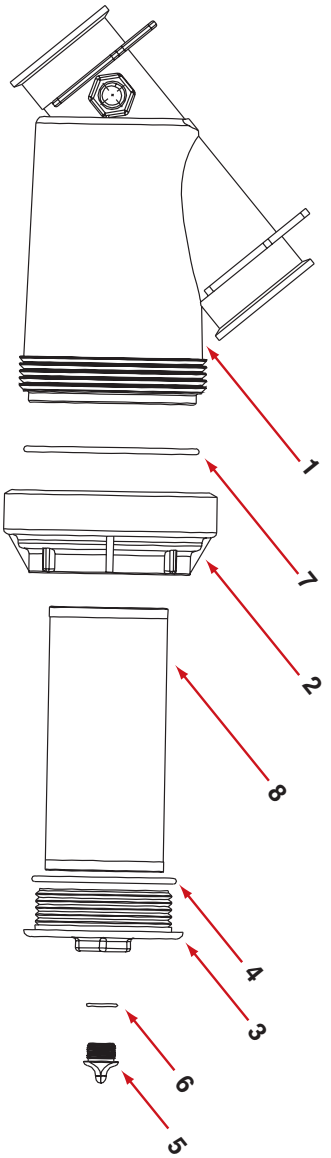

REPLACEMENT PARTS MLS222				
ITEM	PART NO	DESCRIPTION	QTY	PRICE EA
1	LST204SS	4 SS Mesh Screen	1	
1	LST206SS	6 SS Mesh Screen	1	
1	LST208SS	8 SS Mesh Screen	1	
1	LST210SS	10 SS Mesh Screen	1	
1	LST216SS	16 SS Mesh Screen	1	
1	LST230SS	30 SS Mesh Screen	1	
1	LST250SS	50 SS Mesh Screen	1	
1	MLS250SS	50 SS Mesh Perforated Screen	1	
1	LST280SS	80 SS Mesh Screen	1	
1	MLS280SS	80 SS Mesh Perforated Screen	1	
1	LST2100SS	100 SS Mesh Screen	1	
1	MLS2100SS	100 SS Mesh Perforated Screen	1	
2	MLS222B	2" Flanged Y Strainer Body	1	
3	MLS220C1	2" Flanged Y Strainer Cap	1	
4	MLS220R1	2" Flanged Y Strainer Ring	1	
5	LSQ200-R	2" Plug Gasket	1	
6	LSQ200-PL	2" Plug	1	
7	MLS220G1	2" Body Gasket	1	
2-7	MLS222BC	Strainer without Screen	1	

REPLACEMENT PARTS MLS300				
ITEM	PART NO	DESCRIPTION	QTY	PRICE EA
1	MLS300B	3" Flanged Y Strainer Body	1	
2	MLS300CAP	3" Flanged Y Strainer Cap	1	
3	LS300EC	3" End Cap	1	
4	MLS300ECG	3" EPDM End Cap Gasket	1	
4	MLS300ECGV	3" FKM (viton type) End Cap Gasket	1	
5	13777	¾" Plug	1	
6	13778	O-Ring	1	
7	MLS300G	3" EPDM Cap Gasket	1	
7	MLS300GV	3" FKM (viton type) Cap Gasket	1	
8	LS304	4 SS Mesh Screen	1	
8	LS308	8 SS Mesh Screen	1	
8	LS312	12 SS Mesh Screen	1	
8	LS320	20 SS Mesh Screen	1	
8	LS350	50 SS Mesh Screen	1	

Manifold Bolted Tank Fittings "Bottom Drain"™

PATENTED

FEATURES

- Stainless steel bolts.
- Bolt head plugs sealed ultrasonically.
- Glass reinforced polypropylene.
- EPDM gaskets standard.
- FKM (viton type) available.

3"

Note: Tank not included.

MANIFOLD BOLTED BOTTOM DRAIN TANK FLANGES			
PART NO	DESCRIPTION	QTY	PRICE EA
MBF100BD	1" Flange x 1" EPDM Female Thread	27	
MBF100BDV	1" Flange x 1" FKM(viton type) Female Thread	27	
MBF150200BD	2" Flange x 1½" EPDM Female Thread	27	
MBF150200BDV	2" Flange x 1½" FKM (viton type) Female Thread	27	
MBF200BD	2" Flange x 2" EPDM Female Thread	25	
MBF200BDV	2" Flange x 2" FKM(viton type) Female Thread	25	
MBF220BD	2" Full Port Flange x 2" EPDM Female Thread	27	
MBF220BDV	2" Full Port Flange x 2" FKM(viton type)Female Thread	27	
MBF300BD	3" Flange x 3" EPDM Female Thread	16	
MBF300BDV	3" Flange x 3" FKM(viton type) Female Thread	16	

Manifold Bolted Tank Fittings

MANIFOLD BOLTED TANK FLANGES			
PART NO	DESCRIPTION	QTY	PRICE EA
MBF100	1" Flange x 1" EPDM Female Thread	27	
MBF100V	1" Flange x 1" FKM (viton type) Female Thread	27	
MBF200	2" Flange x 2" EPDM Female Thread	27	
MBF200V	2" Flange x 2" FKM (viton type) Female Thread	27	
MBF220	2" Full Port Flange x 2" EPDM Female Thread	27	
MBF220V	2" Full Port Flange x 2" FKM (viton type) Female Thread	27	
MBF300	3" Flange x 3" EPDM Female Thread	27	
MBF300V	3" Flange x 3" FKM (viton type) Female Thread	27	

Longer bolts available for thicker tanks! See page 203.
See page 110 for gaskets.

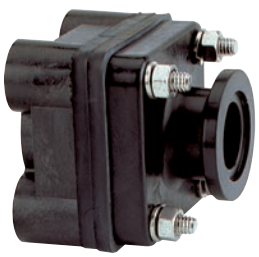

1"-2" 4-bolt

3" 6-bolt

Manifold "Bottom Drain"™ & Bulkhead Tank Fittings

PATENTED

MANIFOLD POLY BOTTOM DRAIN TANK FLANGES				
PART NO	DESCRIPTION	HOLE SIZE	QTY	PRICE EA
MTF220BD	2" x 2" Full Port Manifold EPDM Flange	3¼"	1	
MTF300BD	3" x 3" Manifold EPDM Flange	4½"	1	

**Gasket and clamp not included. Please see page 81 for items.*

MANIFOLD POLY BULKHEAD FITTINGS				
PART NO	DESCRIPTION	HOLE SIZE	QTY	PRICE EA
MTF220	2" Manifold Poly Bulkhead EPDM Tank Fitting	3¼"	1	
MTF300	3" Manifold Poly Bulkhead EPDM Tank Fitting	4½"	1	

**Gasket not included. Please see page 81 for items.*

Dry Poppet Couplings

FEATURES

- Lightweight.
- Minimal fluid spillage.
- Easy to use.
- Economical.
- Reduces risk of exposure.
- Wide range of chemical resistance.
- Maximum operating pressure 70 P.S.I. @ 70°F.
- Maximum operating temperature 150°F.
- 30 GPM maximum flow.
- Precision molded in polypropylene.
- 1" Female NPT threads.

APPLICATIONS

- Agriculture
- Industrial
- Pharmaceutical
- Chemical processing

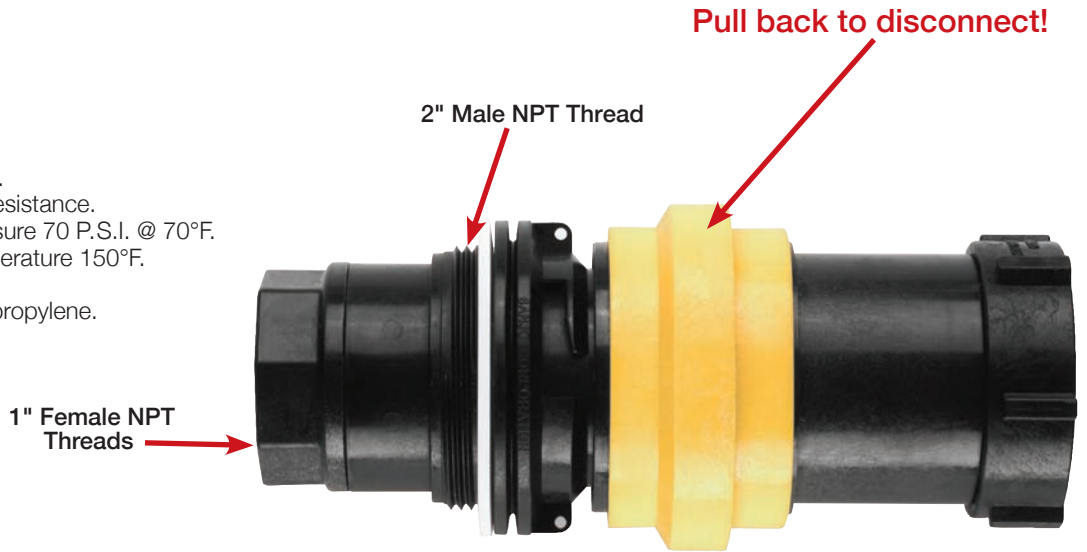

Male Adapter & Female Coupler shown coupled together but sold separately.

DRY POPPET COUPLINGS			
PART NO	DESCRIPTION	QTY	PRICE EA
DPCF100	Female Dry Poppet Coupler, 1" Female NPT Threads w/ FKM (viton type) Seals	1	
DPCM100	Male Dry Poppet Adapter, 1" Female NPT Threads w/ FKM (viton type) Seals	1	
DPCMT100	Male Dry Poppet Adapter, w/2" Male Threaded Body, 1" Female NPT Threads w/ FKM (viton type) Seals	1	

Male Adapter Dry Poppet DPCM100

2" Male NPT Thread

Male Adapter Dry Poppet DPCMT100

Female Coupling Dry Poppet DPCF100

1½" Polypropylene Dry-Disconnect

FEATURES

- Lightweight.
- Unrestricted 1½" flow.
- Minimal fluid spillage.
- Easy to use.
- Economical.
- Reduces risk of exposure.
- Wide range of chemical resistance.
- Cannot be uncoupled in open position.
- Spillage Data: 1½" = 2 ml and 2" = 2 ml
- Maximum operating pressure 100 P.S.I. @ 70°F or 70 P.S.I. @ 150°F.

DRY MATE® patented

Old style Dry-Mate

Prevents Accidental Spills And Exposure!
Patented Double Ball Design With Cam Lever Connection!

POLY DRY-MATE SETS						
PART NO	DESCRIPTION	MAX PSI	PIPE SIZE	OPENING THRU BALL	QTY	PRICE EA
DM150AD	1½" Poly Dry-Mate Set	100	1½"	1½"	1	

User friendly: Operating a Banjo Dry-Mate is simple. The handles interlock making it easy to identify which handle opens or closes first. No guessing involved! The two Dry-Mate halves couple together with cam levers for positive engagement.

Design: The Banjo Dry-Mate is designed for safe and easy spill free connections. The "double ball" design allows maximum flow, while the cam lever style of connection is the most recognized fluid connector.

POLY MALE DRY-MATE						
PART NO	DESCRIPTION	MAX PSI	PIPE SIZE	OPENING THRU BALL	QTY	PRICE EA
DM150A	1½" Male x FPT NPT	100	1½"	1½"	1	
DM150AB	1½" Male x FPT BSP w/FKM Seals	100	1½"	1½"	1	
DM150ABE	1½" Male x FPT BSP w/EPDM Seals	100	1½"	1½"	1	
DM150ABT	1½" Male x FPT BSP w/ Kalrez® Seals	100	1½"	1½"	1	
DM150AE	1½" Male x FPT NPT w/ EPDM Seals	100	1½"	1½"	1	
DM150AT	1½" Male x FPT NPT w/ Kalrez® Seals	100	1½"	1½"	1	

Comes complete with dust covers to protect balls and seals when not in use. Lanyard included.

POLY FEMALE DRY-MATE						
PART NO	DESCRIPTION	MAX PSI	PIPE SIZE	OPENING THRU BALL	QTY	PRICE EA
DM150D	1½" Female x FPT NPT	100	1½"	1½"	1	
DM150DB	1½" Female x FPT BSP	100	1½"	1½"	1	
DM150DBE	1½" Female x FPT BSP w/ EPDM Seals	100	1½"	1½"	1	
DM150DBT	1½" Female x FPT BSP w/ Kalrez® Seals	100	1½"	1½"	1	
DM150DE	1½" Female w/EPDM Seals	100	1½"	1½"	1	
DM150DT	1½" Female w/Kalrez® Seals	100	1½"	1½"	1	

DMMT201A

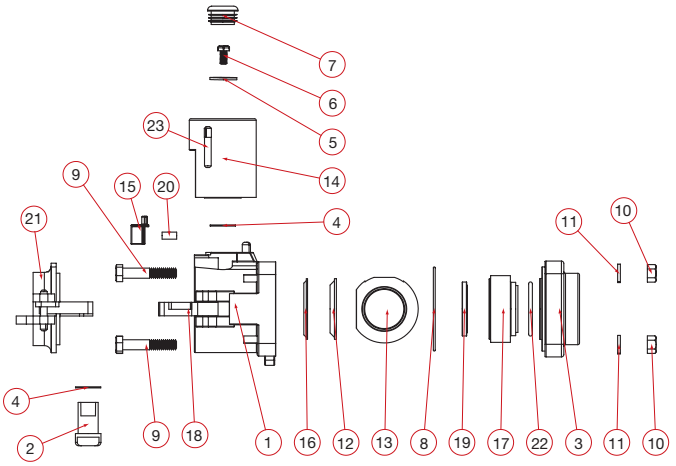

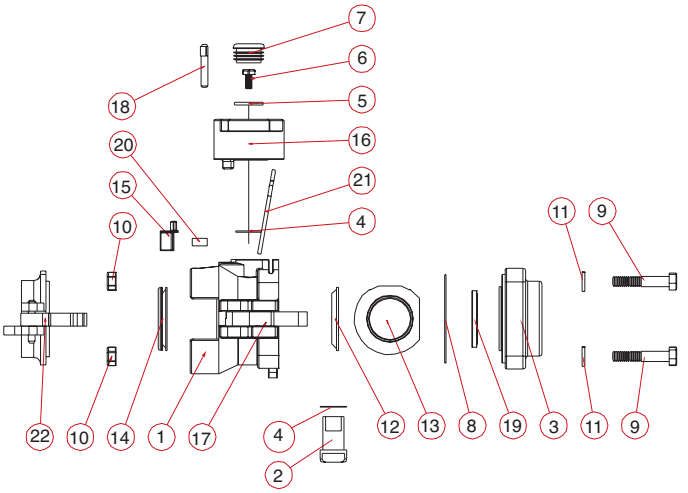

REPLACEMENT PARTS DM150A & DM200A				
ITEM	PART NO	DESCRIPTION	QTY	PRICE EA
1	DM20254	Male Dry-Mate Body	1	
2	VS20151*	Stem	1	
3	DM20257	1½" Female NPT End Plate	1	
3	DM20257B	1½" Female BSP End Plate	1	
3	V20257B	1½" Female BSP End Plate (DM150ABE)	1	
4	V20060*	Thrust Bearing PTFE	2	
5	V20021	Handle Flat Washer	1	
6	V20020	Handle Bolt	1	
7	V20353C	Handle Plug	1	
8	V21204V*	FKM (viton type) Body O-Ring	1	
9	V20010SS	Body Bolts	1	
10	V20019	⅜" 16 SS Hex Nut	4	
11	V20018	⅜" Lock Washer	4	
12	DB20258*	Seat PTFE	4	
13	DB20255*	Ball	1	
14	DM20153M	Male Handle	1	
14	DB20153M	Low Profile Handle	1	
15	DB20288*	Anti-Rotation Button	1	
16	DB20290*	FKM (viton type) Face Seal	1	
16	DM20295A	EPDM Face Seal	1	
16	DM20296	Kalrez® Face Seal	1	
17	DB20294	Valve Insert	2	
18	DM20300	Cam	2	
19	V20258A*	End Plate Seat	1	
20	DB20281	Button Spring	1	
21	DM200CAP	Dust Cap	1	
22	DM20265	Spacer O-Ring	2	
23	200P	Pin	1	
N/S	V20207A	Lanyard	1	
N/S	DM20200A	Repair Kit	1	

REPLACEMENT PARTS DM150D & DM200D				
ITEM	PART NO	DESCRIPTION	QTY	PRICE EA
1	DM20254F	Female Dry-Mate Body	1	
1	DM20254T	Male Bolted TFE Body	1	
2	VS20151*	Stem	1	
3	DM20257	1½" NPT End Plate	1	
3	DM20257B	1½" BSP End Plate	1	
3	V20257B	1½" BSP End Plate (DM150DBE)	1	
4	V20060*	Thrust Bearing PTFE	2	
5	V20021	Handle Flat Washer	1	
6	V20020	Handle Bolt	1	
7	V20353C	Handle Plug	1	
8	V21204V*	FKM (viton type) Body O-Ring	1	
8	V21204	TFE End Plate Body Gasket	1	
9	V20010SS	Body Bolts	1	
10	V20019	⅜" 16 SS Hex Nut	4	
11	V20018	⅜" Lock Washer	4	
12	DB20258*	Seat PTFE	4	
13	DB20255*	Ball	1	
14	DM20294A	FKM (viton type) Face Seal	1	
14	DM20295A	EPDM Face Seal	1	
14	DM20296	Kalrez® Face Seal	1	
15	DB20288*	Anti-Rotation Button	1	
16	DM20153F	Female Handle	1	
17	DM200KX	Cam Arm	1	
18	200P	Pin	2	
19	V20258A*	End Plate Seat	2	
20	DB20281*	Button Spring	1	
21	DM20289	Locking Yoke	1	
22	DM200PL	Dust Plug	1	
N/S	V20207A	Lanyard	1	
N/S	DM20200D	Repair Kit	1	

Valve repair kits contain items marked with asterisk*.

2" Polypropylene Dry-Disconnect

FEATURES

- Lightweight.
- Unrestricted 1½" flow.
- Minimal fluid spillage.
- Easy to use.
- Economical.
- Reduces risk of exposure.
- Wide range of chemical resistance.
- Cannot be uncoupled in open position.
- Spillage Data: 1½" = 2 ml and 2" = 2 ml
- Maximum operating pressure 100 P.S.I. @ 70°F or 70 P.S.I. @ 150°F.

DRY MATE® patented

Old style Dry-Mate

Prevents Accidental Spills And Exposure!
Patented Double Ball Design With Cam Lever Connection!

POLY DRY-MATE SETS						
PART NO	DESCRIPTION	MAX PSI	PIPE SIZE	OPENING THRU BALL	QTY	PRICE EA
DM200AD	2" Poly Dry-Mate Set	100	2"	1½"	1	

User friendly: Operating a Banjo Dry-Mate is simple. The handles interlock making it easy to identify which handle opens or closes first. No guessing involved! The two Dry-Mate halves couple together with cam levers for positive engagement.

Design: The Banjo Dry-Mate is designed for safe and easy spill free connections. The "double ball" design allows maximum flow, while the cam lever style of connection is the most recognized fluid connector.

POLY MALE DRY-MATE						
PART NO	DESCRIPTION	MAX PSI	PIPE SIZE	OPENING THRU BALL	QTY	PRICE EA
DM200A	2" Male x FPT NPT	100	2"	1½"	1	
DM200AB	2" Male x FPT BSP	100	2"	1½"	1	
DM200AE	2" Male x FPT NPT w/ EPDM Seals	100	2"	1½"	1	
DM200AT	2" Male x FPT NPT w/ Kalrez® Seals	100	2"	1½"	1	
DMMT201A	2" Male x Male NPT w/low profile handle	100	2"	1½"	1	
DMMT201AE	2" Male x Male NPT w/low profile handle w/EDPM Seals	100	2"	1½"	1	

Comes complete with dust covers to protect balls and seals when not in use. Lanyard included.

Manifold Connection also available page 74.

POLY FEMALE DRY-MATE						
PART NO	DESCRIPTION	MAX PSI	PIPE SIZE	OPENING THRU BALL	QTY	PRICE EA
DM200D	2" Female x FPT NPT	100	2"	1½"	1	
DM200DB	2" Female x FPT BSP	100	2"	1½"	1	
DM200DE	2" Female w/EPDM Seals	100	2"	1½"	1	
DM200DT	2" Female w/Kalrez® Seals	100	2"	1½"	1	

DMMT201A

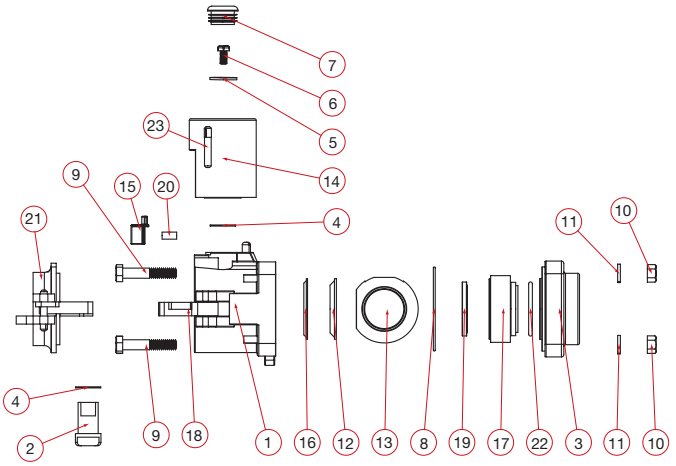

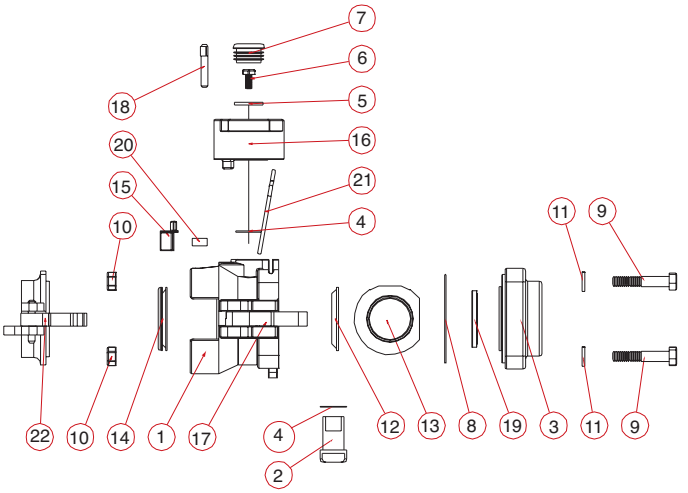

REPLACEMENT PARTS DM150A & DM200A				
ITEM	PART NO	DESCRIPTION	QTY	PRICE EA
1	DM20254	Male Dry-Mate Body	1	
2	VS20151*	Stem	1	
3	DM20256	2" Female NPT End Plate	1	
3	V20291	2" Female Manifold End Plate	1	
3	DM20256B	2" Female BSP End Plate	1	
3	DMMT20256	2" Male NPT End Plate	1	
4	V20060*	Thrust Bearing PTFE	2	
5	V20021	Handle Flat Washer	1	
6	V20020	Handle Bolt	1	
7	V20353C	Handle Plug	1	
8	V21204V*	FKM (viton type) Body O-Ring	1	
9	V20010SS	Body Bolts	1	
10	V20019	3/8" 16 SS Hex Nut	4	
11	V20018	3/8" Lock Washer	4	
12	DB20258*	Seat PTFE	4	
13	DB20255*	Ball	1	
14	DM20153M	Male Handle	1	
14	DB20153M	Low Profile Handle	1	
15	DB20288*	Anti-Rotation Button	1	
16	DB20290*	FKM (viton type) Face Seal	1	
16	DM20295A	EPDM Face Seal	1	
16	DM20296	Kalrez® Face Seal	1	
17	DB20294	Valve Insert	2	
18	DM20300	Cam	2	
19	V20258A*	End Plate Seat	1	
20	DB20281	Button Spring	1	
21	DM200CAP	Dust Cap	1	
22	DM20265	Spacer O-Ring	2	
23	200P	Pin	1	
N/S	V20207A	Lanyard	1	
N/S	DM20200A	Repair Kit	1	

REPLACEMENT PARTS DM150D & DM200D				
ITEM	PART NO	DESCRIPTION	QTY	PRICE EA
1	DM20254F	Female Dry-Mate Body	1	
1	DM20254T	Male Bolted TFE Body	1	
2	VS20151*	Stem	1	
3	DM20256	2" NPT End Plate	1	
3	V20294	2" Manifold End Plate	1	
3	DM20256B	2" BSP End Plate	1	
4	V20060*	Thrust Bearing PTFE	2	
5	V20021	Handle Flat Washer	1	
6	V20020	Handle Bolt	1	
7	V20353C	Handle Plug	1	
8	V21204V*	FKM (viton type) Body O-Ring	1	
8	V21204	TFE End Plate Body Gasket	1	
9	V20010SS	Body Bolts	1	
10	V20019	3/8" 16 SS Hex Nut	4	
11	V20018	3/8" Lock Washer	4	
12	DB20258*	Seat PTFE	4	
13	DB20255*	Ball	1	
14	DM20294A	FKM (viton type) Face Seal	1	
14	DM20295A	EPDM Face Seal	1	
14	DM20296	Kalrez® Face Seal	1	
15	DB20288*	Anti-Rotation Button	1	
16	DM20153F	Female Handle	1	
17	DM200KX	Cam Arm	1	
18	200P	Pin	2	
19	V20258A*	End Plate Seat	2	
20	DB20281*	Button Spring	1	
21	DM20289	Locking Yoke	1	
22	DM200PL	Dust Plug	1	
N/S	V20207A	Lanyard	1	
N/S	DM20200D	Repair Kit	1	

Valve repair kits contain items marked with asterisk*.

3" Polypropylene Dry-Disconnect

DRY MATE® patented

FEATURES

- Lightweight.
- Unrestricted 3" flow.
- Minimal fluid spillage.
- Easy to use.
- Economical.
- Reduces risk of exposure.
- Wide range of chemical resistance.
- Cannot be uncoupled in open position.
- Spillage Data: 3" = 25 ml
- Maximum operating pressure 100 P.S.I. @ 70°F or 75 P.S.I. @ 150°F.

APPLICATIONS

- Agriculture
- Industrial
- Pharmaceutical
- Chemical processing

Male & Female shown coupled together.
Male & Female sold separately as shown below.

PREVENTS ACCIDENTAL SPILLS AND EXPOSURE!

3" FULL PORT POLY DRY-MATE						
PART NO	DESCRIPTION	MAX PSI	PIPE SIZE	OPENING THRU BALL	QTY	PRICE EA
DM300AFP	3" FP Male x 3" Female NPT Threads w/ FKM(viton type) Seals	100	3"	3"	1	
DM300ABFP	3" FP Male x 3" BSP Threads w/ FKM(viton type) Seals	100	3"	3"	1	
DM300DFP	3" FP Female x 3" Female NPT Threads w/ FKM(viton type) Seals	100	3"	3"	1	
DM300DBFP	3" FP Female x 3" BSP Threads w/ FKM(viton type) Seals	100	3"	3"	1	

User friendly: Operating a Banjo Dry-Mate is simple. The handles interlock making it easy to identify which handle opens or closes first. No guessing involved! The two Dry-Mate halves couple together with cam levers for positive engagement.

Design: The Banjo Dry-Mate is designed for safe and easy spill free connections. The “double ball” design allows maximum flow, while the cam lever style of connection is the most recognized fluid connector.

Female Dry-Mate
DM300DFP

Male Dry-Mate
DM300AFP

Male & Female Sold Separately

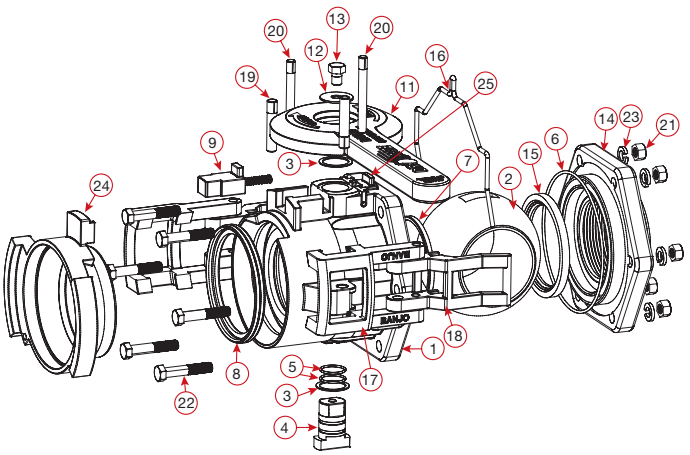

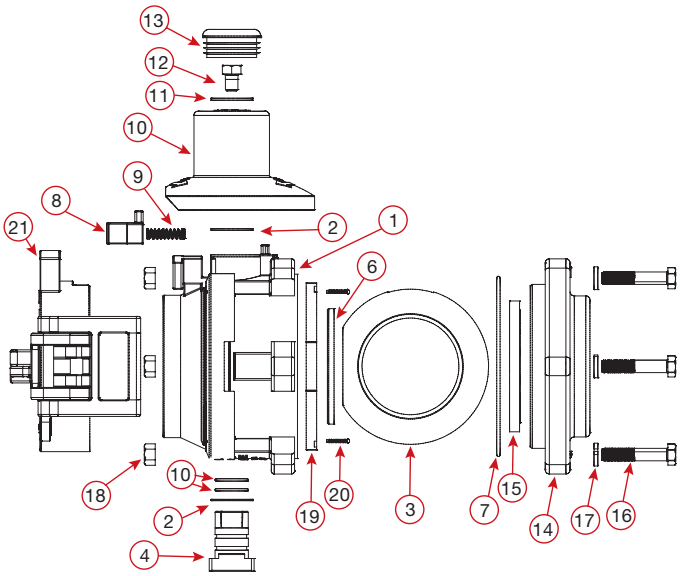

REPLACEMENT PARTS DM300DFP				
ITEM	PART NO	DESCRIPTION	QTY	PRICE EA
1	DM35254F	Female Body	1	
2	V35255A	Ball	1	
3	V25060	Valve Stem Thrust Bearing	2	
4	VS25151C	Stem w/O-Ring Grooves	1	
5	A020V	#20 O-Ring	2	
6	V35265	Body O-Ring FKM (viton type)	1	
7	DM35258	Ball Seat	1	
8	DM35294	Face Seal FKM (viton type)	1	
9	DM35288F	Handle Button	1	
10	DM35281	Button Spring	1	
11	DM35153F	Female Handle	1	
12	V25121	3/8" Washer	1	
13	V25020	3/8" Handle Bolt	1	
14	V35264	End Plate	1	
15	V35258A	Ball Seat	1	
16	DM35289	Locking Yoke	1	
17	DM35009	Clamp Arm	2	
18	DM35010	Clamp Lever	2	
19	GP038200	3/8" x 2" Stainless Steel Groove Pin	2	
20	GP0516300	5/16" x 3" Stainless Steel Groove Pin	2	
21	V20019	3/8" Hex Nut	6	
22	V20010SS	3/8" - 16 x 2" HHCS	6	
23	V20018	3/8" Lockwasher	6	
24	DM300PL	Plug	1	
25	DM35013	Wire Form Hold Down Block	2	

REPLACEMENT PARTS DM300AFP				
ITEM	PART NO	DESCRIPTION	QTY	PRICE EA
1	DM35254M	Male Body	1	
2	V25060	Valve Stem Thrust Bearing	2	
3	DM35255	Ball	1	
4	VS25151C	Stem w/O-ring Grooves	1	
5	A020V	#20 O-Ring	2	
6	DM35258	Ball Seat	1	
7	V35265	Body O-Ring FKM (viton type)	1	
8	DM35288M	Handle Button	1	
9	DM35281	Button Spring	1	
10	DM35153M	Handle	1	
11	V25121	3/8" Washer	1	
12	V25020	3/8" Handle Bolt	1	
13	V25502	3/4" Cap Plug	1	
14	V35264	End Plate	1	
15	V35258A	Ball Seat	1	
16	V20010SS	3/8" - 16 x 2" HHCS	6	
17	V20018	3/8" Lockwasher	6	
18	V20019	3/8" Hex Nut	6	
19	DM35006	Clamp Rib	2	
20	DP02063	#2 x 5/8" Type U Drive Screw	4	
21	DM300CAP	Cap	1	

1" Full Port Stainless Steel Dry-Disconnect

DRY MATE® patented

FEATURES

- 316 stainless steel construction.
- FKM (viton type), EPDM & Kalrez face seals.
- 100% PTFE ball seats.
- 100 P.S.I. maximum operating pressure.
- 300°F maximum operating temperature.
- Spillage Data: 1" = 1ml, 1½" and 2" = 2ml
- When liquid is flowing, Dry-Mate halves cannot be uncoupled without turning handles to closed position.
- When Dry-Mate halves are apart, handles cannot be turned to open position.

APPLICATIONS

- Agriculture
- Industrial
- Pharmaceutical
- Chemical processing

Available with Female NPT or BSP Threads

SIZES

- Sizes: 1" Full Port, 1½" Full Port and 2" Standard Port (Female NPT & BSP Threads)

DRY-DISCONNECTS

PREVENTS ACCIDENTAL SPILLS AND EXPOSURE!

Male & Female shown coupled together.
Male & Female sold separately as shown below.

1" FULL PORT STAINLESS STEEL DRY-MATE						
PART NO	DESCRIPTION	MAX PSI	PIPE SIZE	OPENING THRU BALL	QTY	PRICE EA
DM100ASS	1" Male x NPT w/PTFE Seals	100	1"	1"	1	
DM100ABSS	1" Male x BSP w/PTFE Seals	100	1"	1"	1	
DM100DSS	1" Female x NPT w/FKM(viton type) Seals	100	1"	1"	1	
DM100DSSE	1" Female x NPT w/EPDM Seals	100	1"	1"	1	
DM100DSST	1" Female x NPT w/Kalrez®Seals	100	1"	1"	1	
DM100DBSS	1" Female x BSP w/FKM(viton type) Seals	100	1"	1"	1	
DM100DBSSE	1" Female x BSP w/EPDM Seals	100	1"	1"	1	
DM100DBSST	1" Female x BSP w/Kalrez®Seals	100	1"	1"	1	

EASY CAM LEVER ACTION! THE MOST RECOGNIZED STYLE IN FLUID CONNECTION!

Male & Female sold separately as shown below.

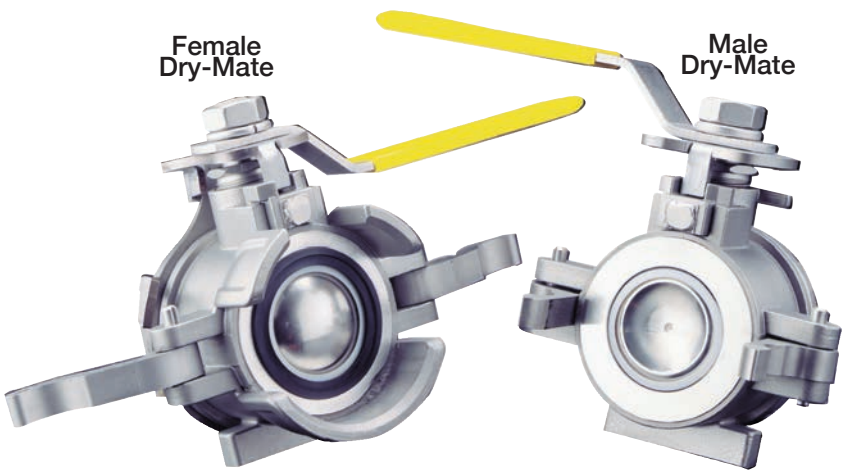

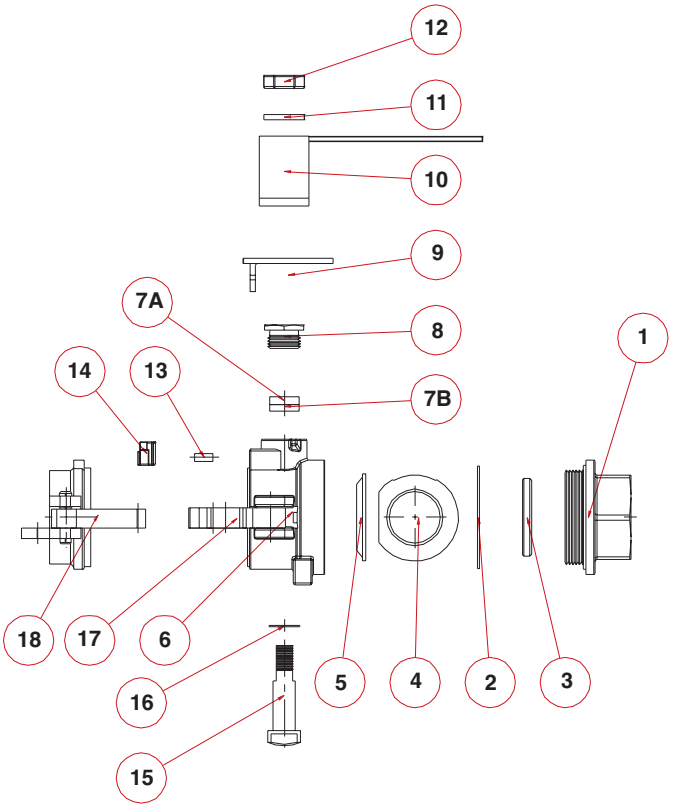

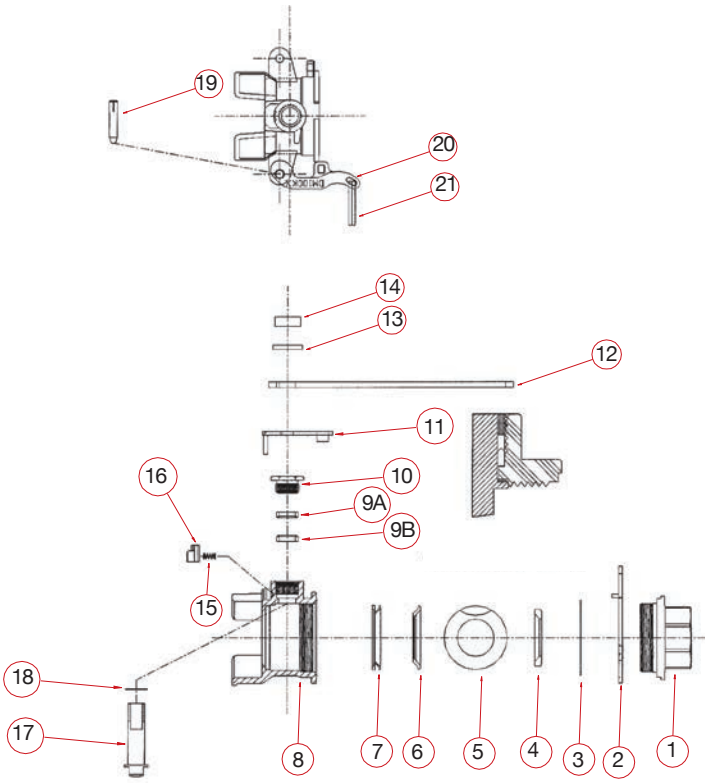

REPLACEMENT PARTS DM100ASS				
ITEM	PART NO	DESCRIPTION	QTY	PRICE EA
1	DM10257SS	1" NPT End Plate	1	
1	DM10257BSS	1" BSP End Plate	1	
2	VSS10204*	Body Gasket PTFE	1	
3	VSS10258*	Seat PTFE	1	
4	DM10255SS*	Ball	1	
5	DM10258*	Seat PTFE	1	
6	DM10254MSS	Body	1	
7A	VSS10160F*	Stem Packing PTFE	1	
7B	VSS10160M*	Stem Packing PTFE	1	
8	VSS10159	Gland Nut	1	
9	DM10155SS	Interlock Cam	1	
10	DM10153MSS	Male Handle	1	
11	VSS10021	7/16" Lock Washer	1	
12	VSS10020	7/16" - 20 Jam Nut	1	
13	DM10281	Spring	1	
14	DM10288SS	Handle Interlcok	1	
15	DM10151SS	Stem	1	
16	VSS10060*	Thrust Bearing	1	
17	DM10300	Profile Insert	2	
18	100P	Pin	2	
N/S	DM100CAP	Poly Cap	1	
N/S	V20207	Lanyard	1	
N/S	DM101SS	Repair Kit	1	

Valve repair kits contain items marked with asterisk*.

REPLACEMENT PARTS DM100DSS				
ITEM	PART NO	DESCRIPTION	QTY	PRICE EA
1	DM10256SS	1" NPT End Plate	1	
1	DM10256BSS	1" BSP End Plate	1	
2	DM10289SS	Locking Yoke	1	
3	VSS10204*	Body Gasket PTFE	1	
4	VSS10258*	Seat PTFE	1	
5	VSS10255*	Ball	1	
6	DM10258*	Seat PTFE	1	
7	DM10294A*	FKM (viton type) Face Seal	1	
7	DM10295A*	EPDM Face Seal	1	
7	DM10296*	Kalrez® Face Seal	1	
8	DM10254FSS	Body	1	
9A	VSS10160F*	Stem Packing PTFE	1	
9B	VSS10160M*	Stem Packing PTFE	1	
10	VSS10159	Gland Nut	1	
11	DM10154SS	Interlock Cam	1	
12	DM10153FSS	Female Handle	4	
13	VSS10021	7/16" Lock Washer	4	
14	VSS10020	7/16" - 20 Jam Nut	4	
15	DM10281	Spring	1	
16	DM10288SS	Handle Interlcok	1	
17	DM10151SS	Stem	1	
18	VSS10060*	Thrust Bearing	1	
19	100P	Pin	2	
20	DM100K	Cam Arm	2	
21	100RING	Cam Arm Ring	2	
N/S	DM100PL	Poly Plug	1	
N/S	V20207	Lanyard	1	
N/S	DM102SSV	FKM (viton type) Repair Kit	1	
N/S	DM102SSE	EPDM Repair Kit	1	
N/S	DM102SST	Kalrez® Repair Kit	1	

1½" Full Port Stainless Steel Dry-Disconnect

DRY MATE® patented

Available with Female NPT or BSP Threads

FEATURES

- 316 stainless steel construction.
- FKM (viton type), EPDM & Kalrez face seals.
- 100% PTFE ball seats.
- 100 P.S.I. maximum operating pressure.
- 300°F maximum operating temperature.
- Spillage Data: 1" = 1ml, 1½" and 2" = 2ml
- When liquid is flowing, Dry-Mate halves cannot be uncoupled without turning handles to closed position.
- When Dry-Mate halves are apart, handles cannot be turned to open position.

APPLICATIONS

- Agriculture
- Industrial
- Pharmaceutical
- Chemical processing

SIZES

- Sizes: 1" Full Port, 1½" Full Port (Female NPT & BSP Threads)

DRY-DISCONNECTS

PREVENTS ACCIDENTAL SPILLS AND EXPOSURE!

Male & Female shown coupled together.
Male & Female sold separately as shown below.

1½" FULL PORT STAINLESS STEEL DRY-MATE						
PART NO	DESCRIPTION	MAX PSI	PIPE SIZE	OPENING THRU BALL	QTY	PRICE EA
DM150ASS	1½" Male x NPT w/PTFE Seals	100	1½"	1½"	1	
DM150ABSS	1½" Male x BSP w/PTFE Seals	100	1½"	1½"	1	
DM150DSS	1½" Female x NPT w/FKM (viton type) Seals	100	1½"	1½"	1	
DM150DSSE	1½" Female x NPT w/ EPDM Seals	100	1½"	1½"	1	
DM150DSST	1½" Female x NPT w/ Kalrez® Seals	100	1½"	1½"	1	
DM150DBSS	1½" Female x BSP w/FKM (viton type) Seals	100	1½"	1½"	1	
DM150DBSSE	1½" Female x BSP w/ EPDM Seals	100	1½"	1½"	1	
DM150DBSST	1½" Female x BSP w/ Kalrez® Seals	100	1½"	1½"	1	

EASY CAM LEVER ACTION! THE MOST RECOGNIZED STYLE IN FLUID CONNECTION!

Male & Female sold separately as shown below.

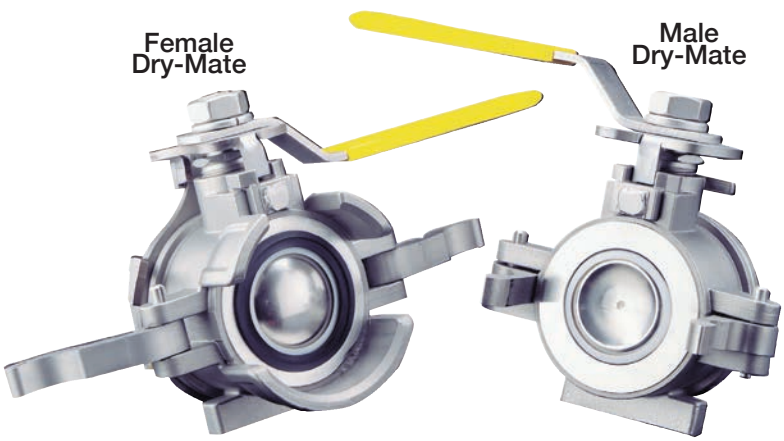

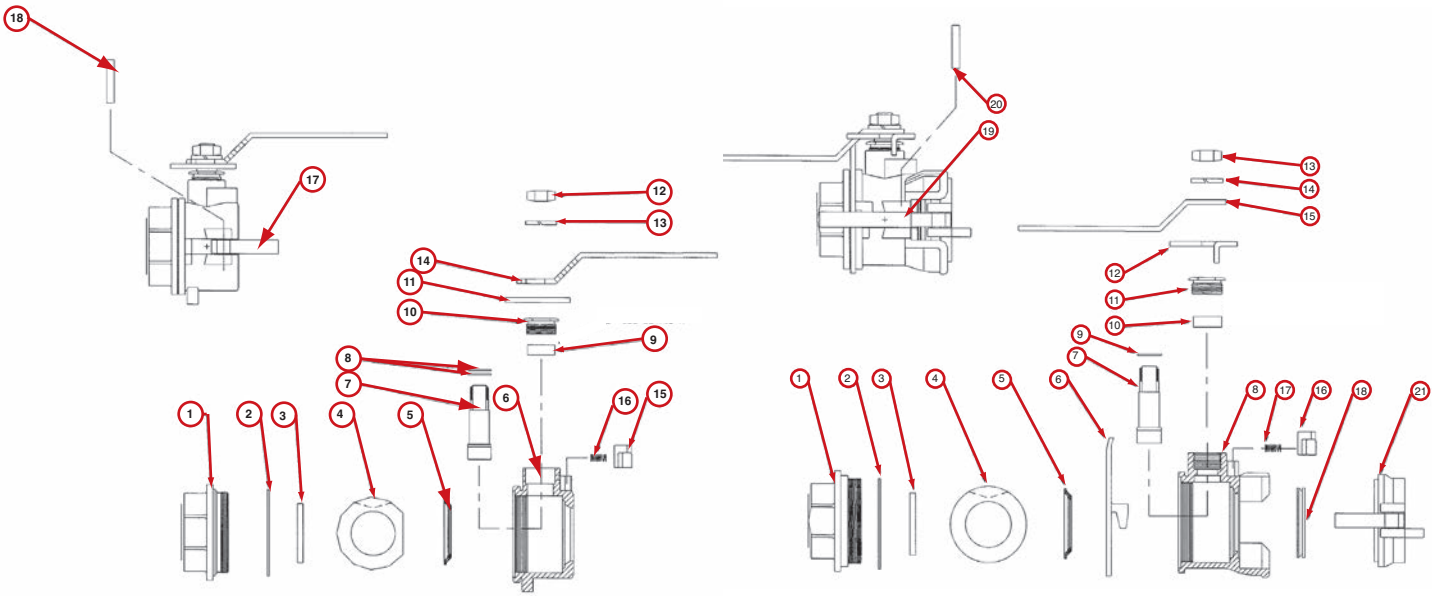

REPLACEMENT PARTS DM150ASS				
ITEM	PART NO	DESCRIPTION	QTY	PRICE EA
1	DM15257MSS	1½" NPTF End Plate	1	
1	DM15257MBSS	1½" BSP End Plate	1	
2	DM15204SS*	Body Gasket PTFE	1	
3	VE20258A*	Seat PTFE	1	
4	DM15255MSS*	Ball	1	
5	DB20258*	Seat PTFE	1	
6	DM15154MSS	Valve Body	1	
7	DM15151SS	Stem	1	
8	VSS15060*	Thrust Bearing PTFE	1	
9	VSS15160*	Stem Packing PTFE	1	
10	VSS15159	Packing Nut	1	
11	DM15155SS	Interlock Cam	1	
12	VSS15020	⅝" - 18 Jam Nut	1	
13	VSS15021	⅝" Lock Washer	1	
14	DM15153SS	Handle	1	
15	DM15288SS	Button	1	
16	DB20281	Spring	2	
17	DM20300	Profile Insert	2	
18	200P	Pin	2	
N/S	DM200ACAP	Dust Cap	1	
N/S	V20207	Lanyard	1	
N/S	DM201SS	Repair Kit	1	

Items shown with * are included in the repair kit. Only 1 face seal will be provided with each kit and it is identified by the repair kit number.

REPLACEMENT PARTS DM150DSS				
ITEM	PART NO	DESCRIPTION	QTY	PRICE EA
1	DM15257FSS	1½" NPTF End Plate	1	
1	DM15257FBSS	1½" BSP End Plate	1	
2	DM15204SS*	Body Gasket PTFE	1	
3	V20258*	Seat PTFE	1	
4	DM15255FSS*	Ball	1	
5	DB20258*	Body	1	
6	DM15289SS	Locking Yoke	1	
7	DM15151SS	Stem	1	
8	DM15154FSS	Body	1	
9	VSS15060*	Thrust Bearing PTFE	1	
10	VSS15160*	Stem Packing PTFE	1	
11	VSS15159	Packing Nut	1	
12	DM15154SS	Interlock Cam	1	
13	VSS15020	⅝" - 18 Jam Nut	1	
14	VSS15021	⅝" Lock Washer	1	
15	DM15153SS	Handle	1	
16	DM15288SS	Button	1	
17	DB20281	Spring	1	
18	DM20294A*	FKM (viton type) Face Seal	1	
18	DM20295A*	EPDM Face Seal	1	
18	DM20296*	Kalrez® Face Seal	1	
19	DM200KX	Cam Arm	2	
20	200P	Pin	2	
21	DM200APL	Dust Plug	1	
N/S	V20207	Lanyard	1	
N/S	DM202SSV	FKM (viton type) Repair Kit	1	
N/S	DM202SSE	EPDM Repair Kit	1	
N/S	DM202SST	Kalrez® Repair Kit	1	

2" Stainless Steel Dry-Disconnect

DRY MATE® patented

FEATURES

- 316 stainless steel construction.
- FKM (viton type), EPDM & Kalrez face seals.
- 100% PTFE ball seats.
- 100 P.S.I. maximum operating pressure.
- 300°F maximum operating temperature.
- Spillage Data: 1" = 1ml, 1½" and 2" = 2ml
- When liquid is flowing, Dry-Mate halves cannot be uncoupled without turning handles to closed position.
- When Dry-Mate halves are apart, handles cannot be turned to open position.

APPLICATIONS

- Agriculture
- Industrial
- Pharmaceutical
- Chemical processing

Available with Female NPT or BSP Threads

SIZES

- Sizes: 2" Standard Port (Female NPT & BSP Threads)

DRY-DISCONNECTS

PREVENTS ACCIDENTAL SPILLS AND EXPOSURE!

Male & Female shown coupled together.
Male & Female sold separately as shown below.

2" STAINLESS STEEL DRY-MATE						
PART NO	DESCRIPTION	MAX PSI	PIPE SIZE	OPENING THRU BALL	QTY	PRICE EA
DM200ASS	2" Male x NPT w/PTFE Seals	100	2"	1½"	1	
DM200ABSS	2" Male x BSP w/PTFE Seals	100	2"	1½"	1	
DM200DSS	2" Female x NPT w/FKM (viton type) Seals	100	2"	1½"	1	
DM200DSSE	2" Female x NPT w/EPDM Seals	100	2"	1½"	1	
DM200DSST	2" Female x NPT w/Kalrez®Seals	100	2"	1½"	1	
DM200DBSS	2" Female x BSP w/FKM (viton type) Seals	100	2"	1½"	1	
DM200DBSSE	2" Female x BSP w/EPDM Seals	100	2"	1½"	1	
DM200DBSST	2" Female x BSP w/Kalrez®Seals	100	2"	1½"	1	

EASY CAM LEVER ACTION! THE MOST RECOGNIZED STYLE IN FLUID CONNECTION!

Male & Female sold separately as shown below.

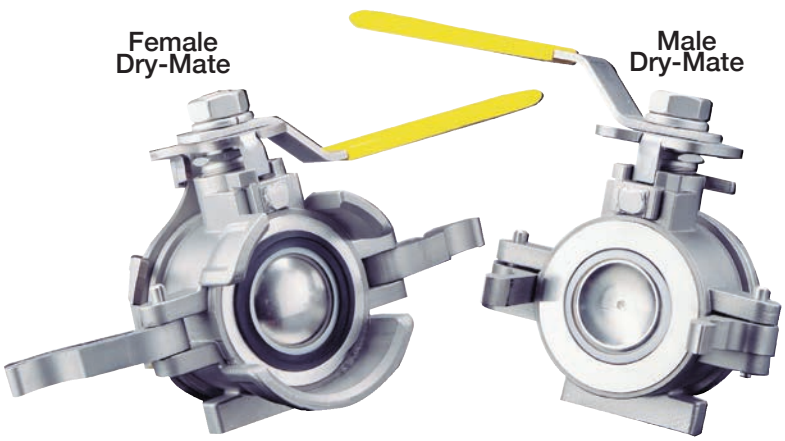

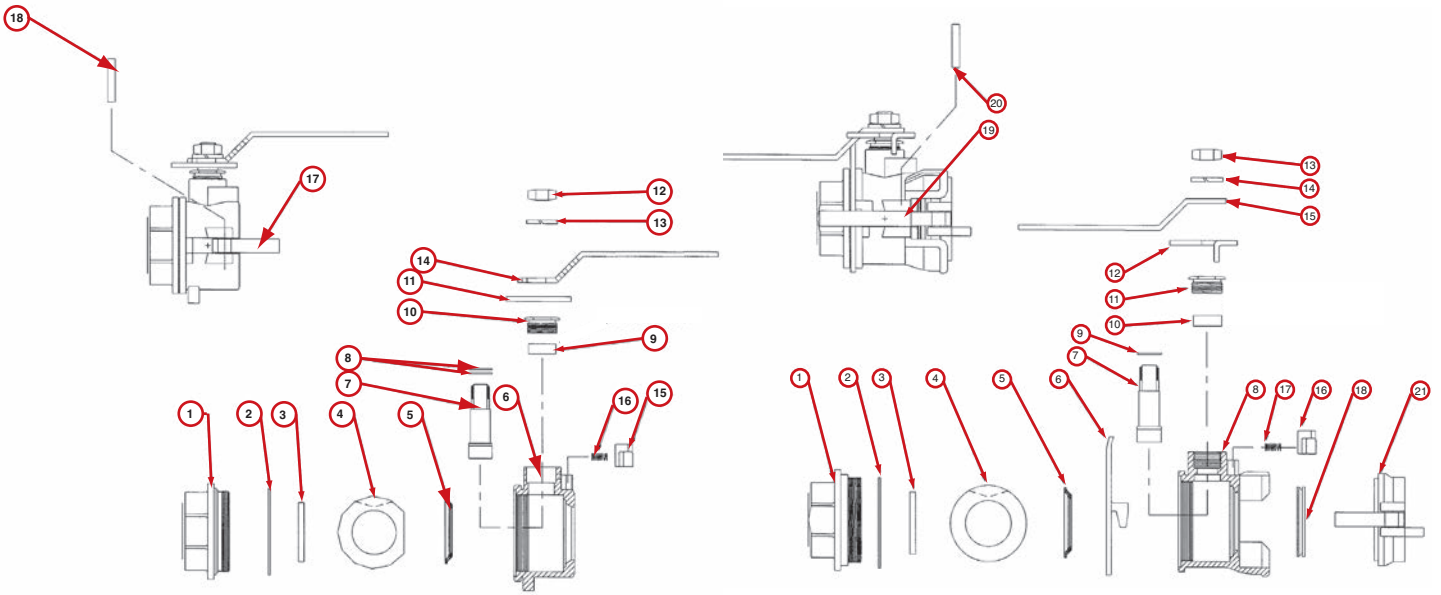

REPLACEMENT PARTS DM200ASS				
ITEM	PART NO	DESCRIPTION	QTY	PRICE EA
1	DM15256MSS	2" NPT End Plate	1	
1	DM15256MBSS	2" Male BSP End Plate	1	
2	DM15204SS*	Body Gasket PTFE	1	
3	VE20258A*	Seat PTFE	1	
4	DM15255MSS*	Ball	1	
5	DB20258*	Seat PTFE	1	
6	DM15154MSS	Valve Body	1	
7	DM15151SS	Stem	1	
8	VSS15060*	Thrust Bearing PTFE	2	
9	VSS15160*	Stem Packing PTFE	1	
10	VSS15159	Packing Nut	1	
11	DM15155SS	Interlock Cam	1	
12	VSS15020	5/8" - 18 Jam Nut	1	
13	VSS15021	5/8" Lock Washer	1	
14	DM15153SS	Handle	1	
15	DM15288SS	Button	1	
16	DB20281	Spring	2	
17	DM20300	Profile Insert	2	
18	200P	Pin	2	
N/S	DM200ACAP	Dust Cap	1	
N/S	V20207	Lanyard	1	
N/S	DM201SS	Repair Kit	1	

Items shown with * are included in the repair kit. Only 1 face seal will be provided with each kit and it is identified by the repair kit number.

REPLACEMENT PARTS DM200DSS				
ITEM	PART NO	DESCRIPTION	QTY	PRICE EA
1	DM15256FSS	2" NPT End Plate	1	
1	DM15256FBSS	2" Female BSP End Plate	1	
2	DM15204SS*	Body Gasket PTFE	1	
3	V20258*	Seat PTFE	1	
4	DM15255FSS*	Ball	1	
5	DB20258*	Body	1	
6	DM15289SS	Locking Yoke	1	
7	DM15151SS	Stem	1	
8	DM15154FSS	Body	1	
9	VSS15060*	Thrust Bearing PTFE	1	
10	VSS15160*	Stem Packing PTFE	1	
11	VSS15159	Packing Nut	1	
12	DM15154SS	Interlock Cam	1	
13	VSS15020	5/8" - 18 Jam Nut	1	
14	VSS15021	5/8" Lock Washer	1	
15	DM15153SS	Handle	1	
16	DM15288SS	Button	1	
17	DB20281	Spring	1	
18	DM20294A*	FKM (viton type) Face Seal	1	
18	DM20295A*	EPDM Face Seal	1	
18	DM20296*	Kalrez® Face Seal	1	
19	DM200KX	Cam Arm	2	
20	200P	Pin	2	
21	DM200APL	Dust Plug	1	
N/S	V20207	Lanyard	1	
N/S	DM202SSV	FKM (viton type) Repair Kit	1	
N/S	DM202SSE	EPDM Repair Kit	1	
N/S	DM202SST	Kalrez® Repair Kit	1	

2" Full Port Stainless Steel Dry-Disconnect

DRY MATE® patented

FEATURES

- 316 stainless steel construction.
- FKM (viton type) standard, EPDM face seals available.
- 100% PTFE ball seats.
- 300 P.S.I. maximum operating pressure.
- 300°F maximum operating temperature.
- Spillage data: Less than 1cc.
- Filled valve for no product residue.
- 20 Degrees rotation either direction to ease coupling male and female halves.
- When liquid is flowing, Dry-Mate halves cannot be uncoupled without turning handles to closed position.
- When Dry-Mate halves are apart, handles cannot be turned to open position.

APPLICATIONS

- Agriculture
- Industrial
- Pharmaceutical
- Chemical processing

SIZES

- Sizes: 2" Full Port (Female NPT & BSP Threads)

PREVENTS ACCIDENTAL SPILLS AND EXPOSURE!

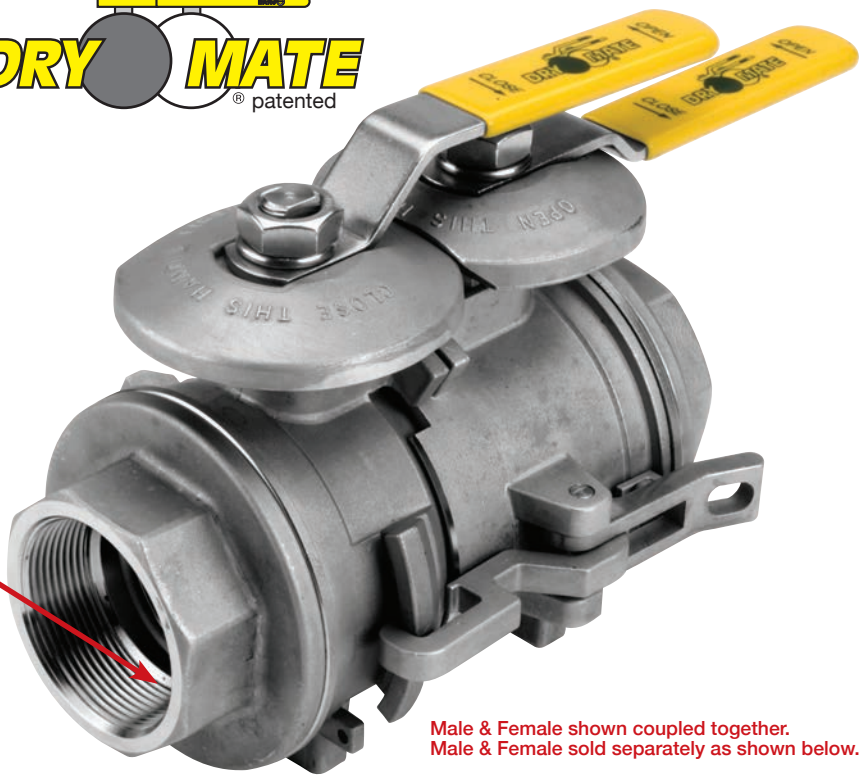

Male & Female shown coupled together.
Male & Female sold separately as shown below.

DRY-DISCONNECTS

2" FULL PORT STAINLESS STEEL DRY-MATE						
PART NO	DESCRIPTION	MAX PSI	PIPE SIZE	OPENING THRU BALL	QTY	PRICE EA
DM220ASS	2" FP Male x NPT Threads w/ all PTFE Seals	300	2"	2"	1	
DM220DSS	2" FP Female x NPT Threads w/ FKM (viton type) Seals	300	2"	2"	1	
DM220DSSE	2" FP Female x NPT Threads w/EPDM Seals	300	2"	2"	1	
DM220DSST	2" FP Female x NPT Threads w/Kalrez® Seals	300	2"	2"	1	
DM220ABSS	2" FP Male x BSP Threads w/ all PTFE Seals	300	2"	2"	1	
DM220DBSS	2" FP Female x BSP Threads w/ FKM (viton type) Seals	300	2"	2"	1	
DM220DBSSE	2" FP Female x BSP Threads w/EPDM Seals	300	2"	2"	1	

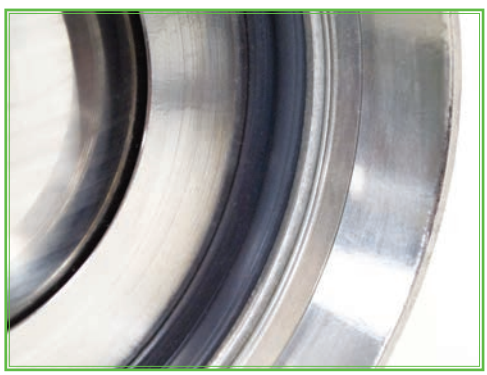

New face seal design for easy seal interchange!
No need to disassemble the valve to change face seals.

Male Dry-Mate

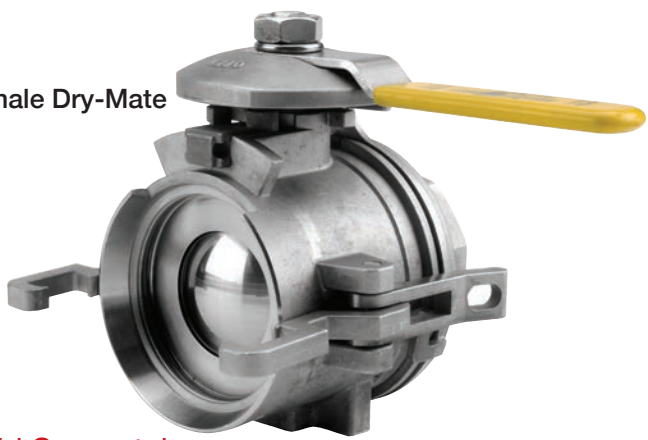

Female Dry-Mate

Male & Female Sold Separately

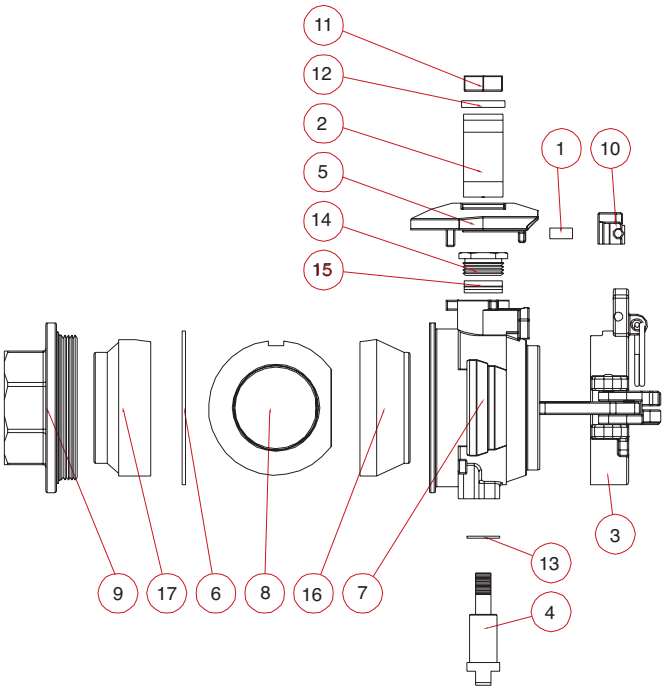

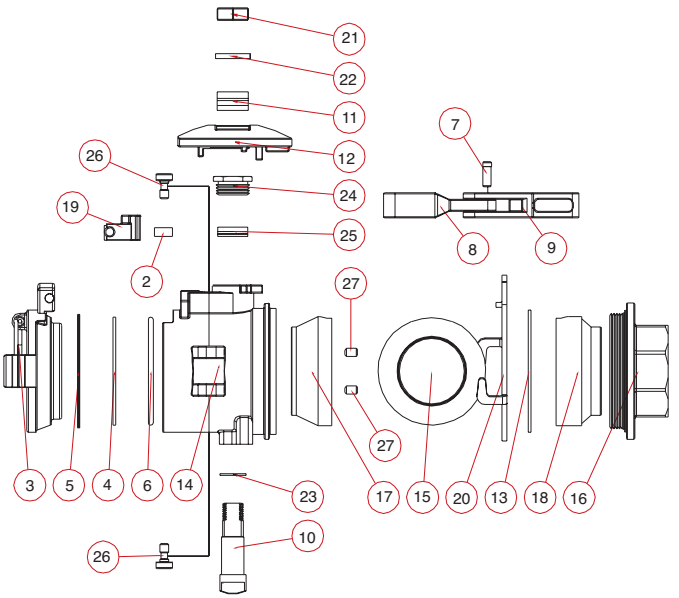

REPLACEMENT PARTS DM220ASS				
ITEM	PART NO	DESCRIPTION	QTY	PRICE EA
1	DB20281	Button Spring	2	
2	DM25153SSM	2" Male Handle	1	
3	DM220CAP	Dust Cap	1	
4	DM25151SS	Stem	1	
5	DM25155SS	Male Handle Interlock	1	
6	DM25204SS*	Body Shim	1	
7	DM25254MSS	Body	1	
8	DM25255SSH	Ball	1	
9	DM25256SS	End Plate	1	
10	DM25288MSS	Safety Button	1	
11	VSS15020	5/8" - 20 Jam Nut	1	
12	VSS15021	5/8" Lock Washer	1	
13	VSS15060*	Stem Packing	1	
14	VSS15159	Packing Nut	1	
15	VSS15160*	Stem Shim	1	
16	DM25258FV1*	Filled Valve Body Seat	1	
17	DM25258FV2*	Filled Valve End Plate Seat	1	
18	DM221SS	Repair Kit	1	

REPLACEMENT PARTS DM220DSS				
ITEM	PART NO	DESCRIPTION	QTY	PRICE EA
2	DB20281	Button Spring	2	
3	DM220PL	Dust Plug	1	
4	DM25001	Seal Ring	1	
5	DM25002	Snap Ring	1	
6	MLS234G	EPDM 234 O-Ring (old style)	1	
6	MLS234GV*	FKM (viton type) 234 O-Ring (old style)	1	
6	DM25294	2" FP FKM(viton type) Face Seal (new style)	1	
6	DM25294T	2" FP Kalrez® Face Seal	1	
7	DM25004	Groove Pin	2	
8	DM25009	Clamp Arm	2	
9	DM25010	Clamp Lever (old style)	2	
9	DM25010A	Clamp Lever (new style)	2	
10	DM25151SS	Stem	1	
11	DM25153SSF	Female Handle	1	
12	DM25154SS	Female Handle Interlock	1	
13	DM25204SS*	Body Shim	4	
14	DM25254FSS	Body	1	
15	DM25255SSHF	Ball	1	
16	DM25256SS	End Plate	1	
17	DM25258FV1*	Filled Valve Body Seat PTFE	1	
18	DM25258FV2*	Filled Valve Body Plate Seat PTFE	1	
19	DM25288FSS	Interlock Button	1	
20	DM25289SS	Locking Yoke	1	
21	VSS15020	5/8" - 20 Jam Nut	1	
22	VSS15021	5/8" Lock Washer	1	
23	VSS15060*	Stem Packing	1	
24	VSS15159	Packing Nut	1	
25	VSS15160*	Stem Shim	1	
26	DM25018	Cam Lever Pin (old style)	4	
26	DM25018A	Cam Lever Pin (new style)	4	
27	DM25020	#10-24 x 5/16" Set Screw	4	
N/S	DM222SS	Repair Kit	1	

Valve repair kits contain items marked with asterisk *.

Closed Transfer System

FEATURES

- Allows to safely and properly flush chemical containers.

CTS200D

CTS200AR

CLOSED TRANSFER SYSTEM ADAPTERS					
PART NO	DESCRIPTION	MAX PSI	PIPE SIZE	QTY	PRICE EA
CTS200AR	Closed Mix Bottle Adapter	40	63 mm btl	1	
CTS200D	Tank Adapter w/2" Male NPT Threads	40	2"	1	

IBC Spin Weld Ball Valves

W230233

W230234

W230235

W230236

W230237

W230238

W230239

W230240

SPINWELD BALL VALVES							
PART NO	DESCRIPTION	GASKET MATERIAL	COLLAR FITS	COLLAR NUMBER	COLLAR ID	QTY	PRICE EA
W230233	2" Poly Spinweld Valve w/NPT Outlet & Cap	FKM (viton type)	MAUSER®	V22283 C & D	2¼"	24/box	
W230234	2" Poly Spinweld Valve w/QDC Outlet & Cap	FKM (viton type)	MAUSER®	V22283 C & D	2¼"	24/box	
W230235	2" Poly Spinweld Valve w/NPT Outlet & Cap	EPDM	MAUSER®	V22283 C & D	2¼"	24/box	
W230236	2" Poly Spinweld Valve w/QDC Outlet & Cap	EPDM	MAUSER®	V22283 C & D	2¼"	24/box	
W230237	2" Poly Spinweld Valve w/NPT Outlet & Cap & Foil Seal	FKM (viton type)	MAUSER®	V22283 C & D	2¼"	24/box	
W230238	2" Poly Spinweld Valve w/QDC Outlet & Cap & Foil Seal	FKM (viton type)	MAUSER®	V22283 C & D	2¼"	24/box	
W230239	2" Poly Spinweld Valve w/NPT Outlet & Cap & Foil Seal	EPDM	MAUSER®	V22283 C & D	2¼"	24/box	
W230240	2" Poly Spinweld Valve w/QDC Outlet & Cap & Foil Seal	EPDM	MAUSER®	V22283 C & D	2¼"	24/box	

Spin Weld Ball Valves

See caps on page 111!

FEATURES

- PTFE valve seats.
- FKM (viton type) stem o-rings.
- Polypropylene.
- Zinc alloy collar.
- Maximum operating pressure 20 P.S.I. @ 70˚ F.
- FKM (viton type), EPDM, and Santoprene collar gaskets available for most valves.
- Handles close in either direction.

Identifying collar number found here.

WSF223MR MAUSER®

WSMT223MR MAUSER®

WSF210 SCHUTZ®

WSMT210 SCHUTZ®

SPINWELD BALL VALVES							
PART NO	DESCRIPTION	GASKET MATERIAL	COLLAR FITS	COLLAR NUMBER	COLLAR ID	QTY	PRICE EA
WSMT223MR	2" Poly Spinweld Valve w/NPT Outlet	EPDM	MAUSER®	V22283 C & D	2¼"	24/box	
WSF223MR	2" Poly Spinweld Valve w/QDC Outlet	EPDM	MAUSER®	V22283 C & D	2¼"	24/box	
WSMT223MRV	2" Poly Spinweld Valve w/NPT Outlet	FKM (viton type)	MAUSER®	V22283 C & D	2¼"	24/box	
WSF223MRV	2" Poly Spinweld Valve w/QDC Outlet	FKM (viton type)	MAUSER®	V22283 C & D	2¼"	24/box	
WSF210	2" Poly Spinweld Valve w/QDC Outlet	Santoprene	SCHUTZ®	V20280 A & B	2¾"	24/box	
WSF210V	2" Poly Spinweld Valve w/QDC Outlet	FKM (viton type)	SCHUTZ®	V20280 A & B	2¾"	24/box	
WSF210FSA	2" Poly Spinweld Valve w/QDC Outlet, Foil Seal & Cap	Santoprene	SCHUTZ®	V20280 A & B	2¾"	24/box	
WSF210FSAV	2" Poly Spinweld Valve w/QDC Outlet, Foil Seal & Cap	FKM (viton type)	SCHUTZ®	V20280 A & B	2¾"	24/box	
WSMT210	2" Poly Spinweld Valve w/NPT Outlet	Santoprene	SCHUTZ®	V20280 A & B	2¾"	24/box	
WSMT210FSA	2" Poly Spinweld Valve w/NPT Outlet, Foil Seal & Cap	Santoprene	SCHUTZ®	V20280 A & B	2¾"	24/box	
WSMT210FSAV	2" Poly Spinweld Valve w/NPT Outlet, Foil Seal & Cap	FKM (viton type)	SCHUTZ®	V20280 A & B	2¾"	24/box	

Note: Please contact our sales department for optional gasket materials.

For *faster* shipping, order in box quantities.

IBC (Intermediate Bulk Container) Bolted Ball Valves

FEATURES

- PTFE valve seats.
- FKM (viton type) stem o-rings.
- Polypropylene.
- Lightweight.
- Zinc alloy collar.
- Maximum operating pressure 20 P.S.I. @ 70˚ F.
- FKM (viton type), EPDM, and collar gaskets available.

F-ISO11 Greif®

Identifying collar number found here.

VSMT202MR Greif®

IBC/TANK ACC.

BOLTED BALL VALVES						
PART NO	DESCRIPTION	GASKET MATERIAL	COLLAR FITS	COLLAR NUMBER	QTY	PRICE EA
F-ISO11	2" Male QDC x V20283 Metal Collar w/Cap & Lanyard	FKM (viton type)	GREIF®	V20283 A & B	24/box	
F-IS100	2" Poly Spinweld Valve w/NPT Outlet w/Cap	FKM (viton type)	GREIF®	V20283 A & B	24/box	
VSF202MR	2" Male QDC x V20283 Metal Collar w/Out Cap & Lanyard	FKM (viton type)	GREIF®	V20283 A & B	24/box	
VSMT202MR	2" Male NPT x V20283 Metal Collar	FKM (viton type)	GREIF®	V20283 A & B	24/box	
VS20209	Tamper Evident Handle Seal-Numbered				1	

FDA Union Valves

FEATURES

- Precision molded in glass reinforced polypropylene, for strength and chemical resistance.
- PTFE seats for smooth operation and proper sealing characteristics.
- Double EPDM O-rings in stem area for extra sealing protection.
- Interlocking body and end plate to allow easy thread connection when installing valves.
- Maximum operating pressure 100 P.S.I. at 70°F.

NIP2101

MBP200

UNION VALVE ADAPTERS			
PART NO	DESCRIPTION	QTY	PRICE EA
MBP200	2" Buttress x 2" NPT Assembly-White	1	
NIP2101	2" NPT x BSP Nipple-White	1	

UNION VALVE			
PART NO	DESCRIPTION	QTY	PRICE EA
UV204FPFD	2" FDA Union Valve-EPDM	1	

Polypropylene Bolted Ball Valves

FEATURES

- Glass reinforced polypropylene.
- Lightweight.
- Maximum operating pressure 100 P.S.I. @ 70°F. & 75 P.S.I. @ 150°F.

Coupling Gasket Not Included (See Chart)

Fits Hoover TUFFTANKII®

Fits Hoover APT®

POLY BOLTED BALL VALVE				
PART NO	DESCRIPTION	OPENING THRU BALL	QTY	PRICE EA
VFB201	2" Male QDC x 2" Female QDC	1½"	24/box	
200G	2" EPDM Coupling Gasket	N/A	50/bag	
200GV	2" FKM (viton type) Coupling Gasket	N/A	50/bag	

POLY BOLTED BALL VALVE				
PART NO	DESCRIPTION	OPENING THRU BALL	QTY	PRICE EA
VSFB201	2" Male QDC Stubby Valve x 2" Female QDC	1½"	24/box	
200G	2" EPDM Coupling Gasket	N/A	50/bag	
200GV	2" FKM (viton type) Coupling Gasket	N/A	50/bag	
VS20200	Repair Kit	N/A	1	

O-Ring Not Included (See Chart)

Fits Clawson®Rock Tank

Cap & Lanyard not shown.

POLY BOLTED BALL VALVE				
PART NO	DESCRIPTION	OPENING THRU BALL	QTY	PRICE EA
VSFTF202A	2" Male QDC x Four Bolt Tank Adapter w/Cap & Lanyard	1½"	24/box	
VTF200GT	PTFE Encapsulated Silicone O-Ring for VSFTF202A	N/A	1	
VS20200	Repair Kit	N/A	1	

POLY BOLTED BALL VALVE						
PART NO	DESCRIPTION	MAX PSI	PIPE SIZE	OPENING THRU BALL	QTY	PRICE EA
VSFMT200	2" Male Adapter x 2" Male NPT	100	2"	1½"	24/box	

For *faster* shipping, order in box quantities.

Poly IBC/Spray Tank Lids

6" IBC SOLID TANK LIDS				
PART NO	DESCRIPTION	GASKET	QTY	PRICE EA
TL650S	6" Solid Tank Lid w/Gasket	Santoprene	1	
TL650E	6" Solid Tank Lid w/Gasket	EPDM	1	

6" IBC TANK LIDS W/UNVENTED 2" PLUG				
PART NO	DESCRIPTION	GASKET	QTY	PRICE EA
TL651S	6" Tank Lid w/Unvented 2" Plug w/Gasket	Santoprene	1	
TL651E	6" Tank Lid w/Unvented 2" Plug w/Gasket	EPDM	1	

6" IBC TANK LIDS W/VENTED 2" PLUG				
PART NO	DESCRIPTION	GASKET	QTY	PRICE EA
TL652S	6" Tank Lid w/Vented 2" Plug w/Gasket	Santoprene	1	
TL652E	6" Tank Lid w/Vented 2" Plug w/Gasket	EPDM	1	

5½" LIDS FOR SPRAY TANKS			
PART NO	DESCRIPTION	QTY	PRICE EA
TL600	5½" Non-Vented Tank Lid	1	
TL600C	5½" Vented Tank Lid	1	

6" EPA TANK LIDS W/VENTED 2" PLUG				
PART NO	DESCRIPTION	GASKET	QTY	PRICE EA
TL652EPA	6" EPA Tank Lid w/Vented 2" Plug	EPDM	1	

2" VENTED & NON-VENTED BUNG PLUGS			
PART NO	DESCRIPTION	QTY	PRICE EA
231EPA	EPA plug with Non-Removable Vent	1	
231MPT	2" MPT Solid Bung w/EPDM Gasket	1	
231MPTBN	2" MPT Solid Bung w/Buna Nitrile Gasket	1	
TL6531	2" Vented Plug w/EPDM Gasket	1	

IBC Polypropylene Accessories

DIN60 (Buttress) Thread

DIN60 (Buttress) Thread

2" BUTTRESS X 2" MALE NPT				
PART NO	DESCRIPTION	GASKET	QTY	PRICE EA
TA283	2" Buttress x 2" Male NPT Threads w/Gasket	Santoprene	1	$23.81

2" BUTTRESS X 2" MALE ADAPTER				
PART NO	DESCRIPTION	GASKET	QTY	PRICE EA
TA283QD	2" Buttress x 2" Male Adapter QDC w/Gasket	Santoprene	1	$18.54

201FPT

211FPT

60FDIN

V20207

2" FEMALE NPT CAP			
PART NO	DESCRIPTION	QTY	PRICE EA
201FPT	2" Female NPT Cap	1	
211FPT	2" Female NPT Cap	1	
60FDIN	60 MM DIN Cap (Buttress Thread)	1	

LANYARD			
PART NO	DESCRIPTION	QTY	PRICE EA
V20207	11" Polyurethane Lanyard	1	

200CAPSH

200CAP

201CAPSH

202CAP

2" CAM LEVER DUST CAP			
PART NO	DESCRIPTION	QTY	PRICE EA
200CAPSH	2" Cam Lever Dust Cap w/short arms	1	
200CAP	2" Cam Lever Dust Cap	1	

2" CAM LEVER DUST CAP			
PART NO	DESCRIPTION	QTY	PRICE EA
201CAPSH	2" Cam Lever Dust Cap w/short arms & rings	1	
202CAP	2" Cam Lever Dust Cap	1	

Poly Bolted Tank Flanges

FEATURES

- Stainless steel bolts.
- Bolt head plugs sealed ultrasonically.
- Glass reinforced polypropylene.
- EPDM gaskets standard & FKM (viton type) available.

BF300

IBC/TANK ACC.

POLY BOLTED TANK FLANGES			
PART NO	DESCRIPTION	QTY	PRICE EA
BF075	¾" x 1" Threaded EPDM Flange	27	
BF075V	¾" x 1" Threaded FKM (viton type) Flange	27	
BF100	1" x 1" Threaded EPDM Flange	27	
BF100V	1" x 1" Threaded FKM (viton type) Flange	27	
BF125	1¼" x 1" Threaded EPDM Flange	27	
BF150	1½" x 2" Threaded EPDM Flange	27	
BF150V	1½" x 2" Threaded FKM (viton type) Flange	27	
BF200	2" x 2" Threaded EPDM Flange	27	
BF200V	2" x 2" Threaded FKM (viton type) Flange	27	
BF220	2" x 2" Full Port Threaded EPDM Flange	27	
BF220V	2" x 2" Full Port Threaded FKM (viton type) Flange	27	
BF300	3" x 3" Threaded EPDM Flange	16	
BF300V	3" x 3" Threaded FKM(viton type) Flange	16	

BOLTED TANK FLANGE GASKETS			
PART NO	DESCRIPTION	QTY	PRICE EA
BF100GE	1" Full EPDM Gasket	1	
BF100GV	1" Full FKM(viton type) Gasket	1	
BF200GE	1½" & 2" Full EPDM Gasket	1	
BF200GV	1½" & 2" Full FKM(viton type) Gasket	1	
BF220GE	2" Full Port EPDM Gasket	1	
BF220GV	2" Full Port FKM(viton type) Gasket	1	
BF300GE	3" Full EPDM Gasket	1	
BF300GV	3" Full FKM(viton type) Gasket	1	

Longer bolts available for thick tank walls. See page 203.

* WARNING: Do not tighten tank flange bolts more than 12 ft pounds.

¾" — 2"

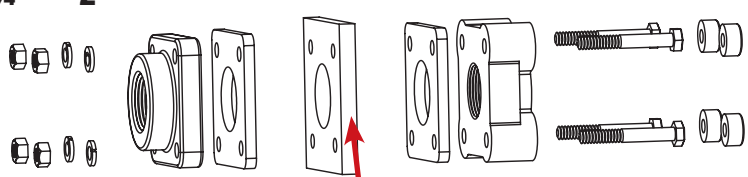

Tank Wall

3"

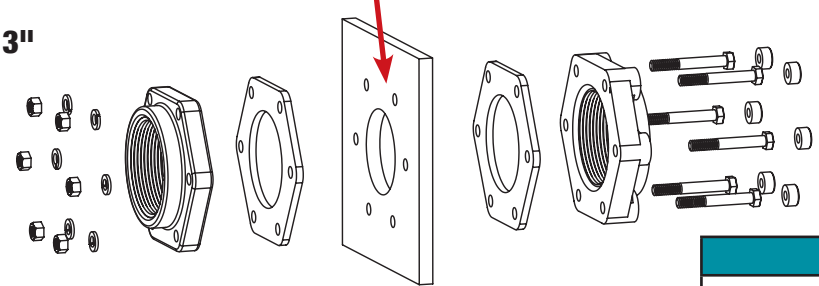

BANJO MAN			
PART NO	DESCRIPTION	QTY	PRICE EA
BANJOMAN	18" x 29"- Assembly Required	1	

Poly Bolted "Bottom Drain"™ Tank Flanges

PATENTED

FEATURES

- Stainless steel bolts.
- Bolt head plugs sealed ultrasonically.
- Glass reinforced polypropylene.
- EPDM gaskets standard.
  FKM (viton type) available.
- Longer bolts available.

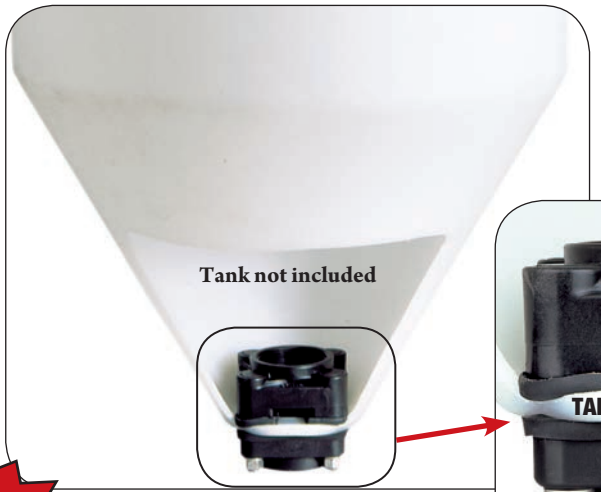

Longer bolts Available on page 203!

Ultrasonically Sealed!

100% Fully Drainable!

- **Allows 100% Rinse Free – No Sediment Build Up!**
- **Excellent for avoiding herbicide cross contamination!**
- **Bolted design for superior strength!**
- **Fits most cone bottom & chemical inductor tanks, 30 gallons and larger.**

BF300BD

For *faster* shipping, order in box quantities.

POLY BOTTOM DRAIN BOLTED TANK FLANGES			
PART NO	DESCRIPTION	QTY	PRICE EA
BF075BD	¾" x 1" Threaded EPDM Flange	27	
BF075BDV	¾" x 1" Threaded FKM (viton type) Flange	27	
BF100BD	1" x 1" Threaded EPDM Flange	27	
BF100BDV	1" x 1" Threaded FKM (viton type) Flange	27	
BF125BD	1¼" x 1" Threaded EPDM Flange	27	
BF125BDV	1¼" x 1" Threaded FKM (viton type) Flange	27	
BF150BD	1½" x 2" Threaded EPDM Flange	27	
BF150BDV	1½" x 2" Threaded FKM (viton type) Flange	27	
BF200BD	2" x 2" Threaded EPDM Flange	27	
BF200BDV	2" x 2" Threaded FKM (viton type) Flange	27	
BF220BD	2" x 2" Full Port Threaded EPDM Flange	27	
BF220BDV	2" x 2" Full Port Threaded FKM (viton type) Flange	27	
BF300BD	3" x 3" Threaded EPDM Flange	16	
BF300BDV	3" x 3" Threaded FKM(viton type) Flange	27	

POLY BOTTOM DRAIN BOLTED TANK FLANGE GASKETS			
PART NO	DESCRIPTION	QTY	PRICE EA
BF100GE	¾", 1" & 1¼" Full EPDM Gasket	1	
BF100GV	¾", 1" & 1¼" Full FKM(viton type) Gasket	1	
BF100GRE	¾", 1" & 1¼" Foot EPDM Gasket	4	
BF100GRV	¾", 1" & 1¼" Foot FKM(viton type) Gasket	4	
BF200GE	1½" & 2" Full EPDM Gasket	1	
BF200GV	1½" & 2" Full FKM(viton type) Gasket	1	
BF200GFE	1½" & 2" Std. Port, 2" Full Port Foot EPDM Gasket	4	
BF200GFV	1½" & 2" Std. Port, 2" Full Port Foot FKM (viton type) Gasket	4	
BF220GE	2" Full Port EPDM Gasket	1	
BF220GV	2" Full Port FKM(viton type) Gasket	1	
BF300GE	3" Full EPDM Gasket	1	
BF300GV	3" Full FKM(viton type) Gasket	1	
BF300GFE	3" Foot EPDM Gasket	6	
BF300GFV	3" Foot FKM(viton type) Gasket	6	

Bulkhead Tank Fittings

FEATURES

- Double sided female NPT threads.
- Available with EPDM or FKM (viton type) gasket.

FEATURES

- Double sided female NPT threads.
- Standard with EPDM gasket, FKM (viton type) available.

POLY BULKHEAD FITTINGS

PART NO	DESCRIPTION	HOLE SIZE	QTY	PRICE EA
TF050	½" Poly Bulkhead EPDM Tank Fitting	1⅝"	10/bag	
TF050V	½" Poly Bulkhead FKM(viton type) Tank Fitting	1⅝"	1	
TF075	¾" Poly Bulkhead EPDM Tank Fitting	1⅝"	10/bag	
TF075V	¾" Poly Bulkhead FKM(viton type) Tank Fitting	1⅝"	1	
TF100	1" Poly Bulkhead EPDM Tank Fitting	2¼"	10/bag	
TF100V	1" Poly Bulkhead FKM(viton type) Tank Fitting	2¼"	1	
TF125	1¼" Poly Bulkhead EPDM Tank Fitting	2¼"	1	
TF125V	1¼" Poly Bulkhead FKM(viton type)Tank Fitting	2¼"	1	
TF150	1½" Poly Bulkhead EPDM Tank Fitting	3"	1	
TF150V	1½" Poly Bulkhead FKM(viton type)Tank Fitting	3"	1	
TF200	2" Poly Bulkhead EPDM Tank Fitting	3"	1	
TF200V	2" Poly Bulkhead FKM(viton type) Tank Fitting	3"	1	
TF200BSP	2" Poly Bulkhead BSP Tank Fitting	3"	1	
TF220	2" Poly Bulkhead EPDM Tank Fitting	3¼"	1	
TF220V	2" Poly Bulkhead FKM(viton type) Tank Fitting	3¼"	1	
TF300	3" Poly Bulkhead EPDM Tank Fitting	4½"	1	
TF300V	3" Poly Bulkhead FKM(viton type) Tank Fitting	4½"	1	
TF300BSP	3" Poly Bulkhead BSP Tank Fitting	4½"	1	
TF400	4" Poly Bulkhead EPDM Tank Fitting	5¾"	1	
TF400V	4" Poly Bulkhead FKM(viton type) Tank Fitting	5¾"	1	

316 SS BULKHEAD FITTINGS

PART NO	DESCRIPTION	HOLE SIZE	QTY	PRICE EA
TF038SS	⅜" SS Bulkhead Tank Fitting	1"	1	
TF050SS	½" SS Bulkhead Tank Fitting	1⅜"	1	
TF075SS	¾" SS Bulkhead Tank Fitting	1⅝"	1	
TF100SS	1" SS Bulkhead Tank Fitting	2¼"	1	
TF125SS	1¼" SS Bulkhead Tank Fitting	2¼"	1	
TF150SS	1½" SS Bulkhead Tank Fitting	3"	1	
TF200SS	2" SS Bulkhead Tank Fitting	3"	1	
TF220SS	2" SS Bulkhead Tank Fitting	3¼"	1	
TF300SS	3" SS Bulkhead Tank Fitting	4⅜"	1	

POLY TANK NUTS

PART NO	DESCRIPTION	QTY	PRICE EA
TF073	½" & ¾" Poly Tank Nuts	1	
TF103	1" & 1¼" Poly Tank Nuts	1	
TF153	1½" & 2" Poly Tank Nuts	1	
TF223	2" Poly Tank Nuts	1	
TF303	3" Poly Tank Nuts	1	
TF403	4" Poly Tank Nuts	1	

BULKHEAD GASKETS

PART NO	DESCRIPTION	HOLE SIZE	FITS POLY	FITS SS	QTY	PRICE EA
100G	⅜" Poly Bulkhead EPDM Gasket	1"		TF038SS	100/bag	
100GV	⅜" Poly Bulkhead FKM(viton type) Gasket	1"		TF038SS	100/bag	
TF138GV	½" Poly Bulkhead FKM(viton type) Gasket	1⅜"		TF050SS	100/bag	
150G	½" & ¾" Poly Bulkhead EPDM Gasket	1⅝"	TF050 & TF075	TF075SS	100/bag	
150GV	½" & ¾" Poly Bulkhead FKM(viton type) Gasket	1⅝"	TF050 & TF075	TF075SS	50/bag	
200G	1" & 1¼" Poly Bulkhead EPDM Gasket	2¼"	TF100 & TF125	TF100SS & TF125SS	50/bag	
200GV	1" & 1¼" Poly Bulkhead FKM(viton type) Gasket	2¼"	TF100 & TF125	TF100SS & TF125SS	50/bag	
300G	1½" & 2" Poly Bulkhead EPDM Gasket	3"	TF200 & TF150	TF200SS & TF150SS	25/bag	
300GV	1½" & 2" Poly Bulkhead FKM(viton type) Gasket	3"	TF200 & TF150	TF200SS & TF150SS	25/bag	
TF220G	2" Poly Bulkhead EPDM Gasket	3¼"	TF220	TF220SS	50/bag	
TF220GV	2" Poly Bulkhead FKM(viton type) Gasket	3¼"	TF220	TF220SS	50/bag	
TF300G	3" Poly Bulkhead EPDM Gasket	4½"	TF300	TF300SS	20/bag	
TF300GV	3" Poly Bulkhead FKM(viton type) Gasket	4½"	TF300	TF300SS	20/bag	
TF400G	4" Poly Bulkhead EPDM Gasket	5¾"	TF400		1	
TF400GV	4" Poly Bulkhead FKM(viton type) Gasket	5¾"	TF400		1	

Please order in bag/box quantities for quick and easy shipping and receiving of your order. All items priced each, not per bag or box quantity.

Anti Vortex Vent Cap

FEATURES

- Male NPT.
- Glass reinforced polypropylene.
- 304 stainless steel screen (optional).

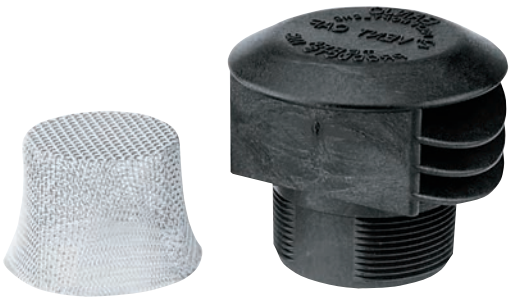

POLY ANTI VORTEX VENT CAPS						
PART NO	DESCRIPTION	BORE SIZE	BORE AREA	VENT AREA	QTY	PRICE EA
VC200	2" Anti Vortex Vent Cap w/No Screen	2"	3.1 sq in	3.9 sq in	1	
VC230	2" Anti Vortex Vent Cap w/12 Mesh 304 SS Screen	2"	3.1 sq in	3.9 sq in	1	
VC300	3" Anti Vortex Vent Cap w/No Screen	3"	7 sq in	9 sq in	1	
VC330	3" Anti Vortex Vent Cap w/10 Mesh 304 SS Screen	3"	7 sq in	9 sq in	1	

Tank flange sold separately on page 109.

Anti Vortex Tank Flange

FEATURES

- Standard w/FKM (viton type).
- Prevents swirl in bottom of tank.

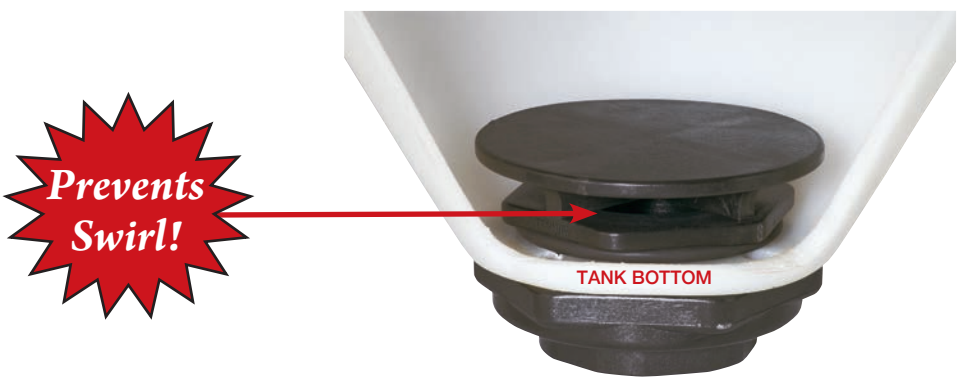

ANTI VORTEX TANK FLANGES				
PART NO	DESCRIPTION	HOLE SIZE	QTY	PRICE EA
TF100AV	1" Anti Vortex Tank Flanges	2¼"	1	
TF125AV	1¼" Anti Vortex Tank Flanges	2¼"	1	
TF150AV	1½" Anti Vortex Tank Flanges	3"	1	
TF200AV	2" Anti Vortex Tank Flanges	3"	1	

Poly Tank Lids

FEATURES
- Maximum air flow through vent channels.
- Airflow equivalent to a 3" hole.
- No secondary venting needed.
- Baffled vents.

Vent Cover

Center Vent

Goes in underside of lid.

IBC/TANK ACC.

10" VENTED TANK LIDS			
PART NO	DESCRIPTION	QTY	PRICE EA
TLVA10	10" Vented Tank Lid & Ring Assembly (new style)	1	
TLA10	10" Vented Tank Lid & Ring Assembly (old style)	1	
TLV10R	10" Vented Tank Lid Assembly w/o Ring	1	
TLV1	Vent Cover	1	
TLV2	Center Vent	1	
TR10	10" Vented Tank Ring Only	1	

10" NON-VENTED TANK LIDS			
PART NO	DESCRIPTION	QTY	PRICE EA
TL101	10" Non-Vented Tank Lid Only	1	
TR10R1	10" Non-Vented Tank Ring Only	1	

Poly Siphon Tubes

FEATURES
- Full flow size.
- Long length.
- Male NPT threads.

POLY SIPHON TUBES			
PART NO	DESCRIPTION	QTY	PRICE EA
ST200	2" Poly Siphon Tube	1	
ST300	3" Poly Siphon Tube	1	

Polypropylene Class 150 ANSI Flanges

FEATURES

- 150 P.S.I. maximum.
- Glass reinforced polypropylene.
- Heavy duty.

150# THREADED ANSI FLANGES			
PART NO	DESCRIPTION	QTY	PRICE EA
AF100	1" Female Thread ANSI Flange	1	
AF150	1½" Female Thread ANSI Flange	1	
AF200	2" Female Thread ANSI Flange	1	
AF300	3" Female Thread ANSI Flange	1	
AF400	4" Female Thread ANSI Flange	1	

150# BLIND ANSI FLANGES			
PART NO	DESCRIPTION	QTY	PRICE EA
AFB100	1" Blind ANSI Flange	1	
AFB150	1½" Blind ANSI Flange	1	
AFB200	2" Blind ANSI Flange	1	
AFB300	3" Blind ANSI Flange	1	
AFB400	4" Blind ANSI Flange	1	

AF150G

AF200G

ANSI FLANGE GASKETS			
PART NO	DESCRIPTION	QTY	PRICE EA
AF100G	1" ANSI Flange EPDM Gasket	1	
AF100GV	1" ANSI Flange FKM (viton type) Gasket	1	
AF150G	1½" ANSI Flange EPDM Gasket	1	
AF150GV	1½" ANSI Flange FKM (viton type) Gasket	1	
AF200G	2" ANSI Flange EPDM Gasket	1	
AF200GV	2" ANSI Flange FKM (viton type) Gasket	1	
AF300G	3" ANSI Flange EPDM Gasket	1	
AF300GV	3" ANSI Flange FKM (viton type) Gasket	1	
AF400G	4" ANSI Flange EPDM Gasket	1	
AF400GV	4" ANSI Flange FKM (viton type) Gasket	1	

316 Stainless Steel Cam Lever Couplings

A

B

C

D

E

F

PL

CAP

FEATURES

- Tough 316 stainless steel to insure durability.
- Chemical resistant to protect against corrosion.
- Precision-made, investment casting high quality process to assure uniformity & proper fit.
- 300 P.S.I. maximum operating pressure.
- Versatile to interchange with all types of cam lever couplings.
- Smooth operation makes connections quick & easy.
- Standard with Buna "N" gaskets. FKM (viton type) & EPDM available. PTFE Available upon request.

WARNING: Couplings should not be disconnected under pressure or with liquid in the line.

CAM LEVER COUPLINGS

316 STAINLESS STEEL CAM LEVER COUPLINGS							
ITEM	DESCRIPTION	¾"	1"	1½"	2"	3"	4"
A	Male Adapter-Female Thread	075ASS	100ASS	150ASS	200ASS	300ASS	400ASS
B	Female Coupler- Male Thread	075BSS	100BSS	150BSS	200BSS	300BSS	400BSS
C	Female Coupler-Hose Shank	075CSS	100CSS	150CSS	200CSS	300CSS	400CSS
D	Female Coupler-Female Thread	075DSS	100DSS	150DSS	200DSS	300DSS	400DSS
E	Male Adapter-Hose Shank	075ESS	100ESS	150ESS	200ESS	300ESS	400ESS
F	Male Adapter-Male Thread	075FSS	100FSS	150FSS	200FSS	300FSS	400FSS
PL	Plug for Female Coupler	075PL/SS	100PL/SS	150PL/SS	200PL/SS	300PL/SS	400PL/SS
CAP	Cap for Male Adapter	075CAP/SS	100CAP/SS	150CAP/SS	200CAP/SS	300CAP/SS	400CAP/SS

¾" SERIES SS CAM LEVER COUPLINGS					
PART NO	DESCRIPTION	MAX PSI	GASKET	QTY	PRICE EA
075ASS	¾" Male Adapter-¾" Female Thread	300	N/A	1	
075BSS	¾" Female Coupler-¾" Male Thread	300	Buna	1	
075CSS	¾" Female Coupler-¾" Hose Shank	300	Buna	1	
075DSS	¾" Female Coupler-¾" Female Thread	300	Buna	1	
075ESS	¾" Male Adapter-¾" Hose Shank	300	N/A	1	
075FSS	¾" Male Adapter-¾" Male Thread	300	N/A	1	
075CAP/SS	¾" Cap-Male Adapter	300	Buna	1	
075PL/SS	¾" Plug-Female Coupler	300	N/A	1	

1" SERIES SS CAM LEVER COUPLINGS					
PART NO	DESCRIPTION	MAX PSI	GASKET	QTY	PRICE EA
100ASS	1" Male Adapter-1" Female Thread	300	N/A	1	
100BSS	1" Female Coupler-1" Male Thread	300	Buna	1	
100CSS	1" Female Coupler-1" Hose Shank	300	Buna	1	
100DSS	1" Female Coupler-1" Female Thread	300	Buna	1	
100ESS	1" Male Adapter-1" Hose Shank	300	N/A	1	
100FSS	1" Male Adapter-1" Male Thread	300	N/A	1	
100CAP/SS	1" Cap-Male Adapter	300	Buna	1	
100PL/SS	1" Plug-Female Coupler	300	N/A	1	

1½" SERIES SS CAM LEVER COUPLINGS

PART NO	DESCRIPTION	MAX PSI	GASKET	QTY	PRICE EA
150ASS	1½" Male Adapter-1½" Female Thread	300	N/A	1	
150BSS	1½" Female Coupler-1½" Male Thread	300	Buna	1	
150CSS	1½" Female Coupler-1½" Hose Shank	300	Buna	1	
150DSS	1½" Female Coupler-1½" Female Thread	300	Buna	1	
150ESS	1½" Male Adapter-1½" Hose Shank	300	N/A	1	
150FSS	1½" Male Adapter-1½" Male Thread	300	N/A	1	
150CAP/SS	1½" Cap-Male Adapter	300	Buna	1	
150PL/SS	1½" Plug-Female Coupler	300	N/A	1	

2" SERIES SS CAM LEVER COUPLINGS

PART NO	DESCRIPTION	MAX PSI	GASKET	QTY	PRICE EA
200ASS	2" Male Adapter-2" Female Thread	300	N/A	1	
200BSS	2" Female Coupler-2" Male Thread	300	Buna	1	
200CSS	2" Female Coupler-2" Hose Shank	300	Buna	1	
200DSS	2" Female Coupler-2" Female Thread	300	Buna	1	
200ESS	2" Male Adapter-2" Hose Shank	300	N/A	1	
200FSS	2" Male Adapter-2" Male Thread	300	N/A	1	
200CAP/SS	2" Cap-Male Adapter	300	Buna	1	
200PL/SS	2" Plug-Female Coupler	300	N/A	1	

3" SERIES SS CAM LEVER COUPLINGS

PART NO	DESCRIPTION	MAX PSI	GASKET	QTY	PRICE EA
300ASS	3" Male Adapter-3" Female Thread	300	N/A	1	
300BSS	3" Female Coupler-3" Male Thread	300	Buna	1	
300CSS	3" Female Coupler-3" Hose Shank	300	Buna	1	
300DSS	3" Female Coupler-3" Female Thread	300	Buna	1	
300ESS	3" Male Adapter-3" Hose Shank	300	N/A	1	
300FSS	3" Male Adapter-3" Male Thread	300	N/A	1	
300CAP/SS	3" Cap-Male Adapter	300	Buna	1	
300PL/SS	3" Plug-Female Coupler	300	N/A	1	

4" SERIES SS CAM LEVER COUPLINGS

PART NO	DESCRIPTION	MAX PSI	GASKET	QTY	PRICE EA
400ASS	4" Male Adapter-4" Female Thread	300	N/A	1	
400BSS	4" Female Coupler-4" Male Thread	300	Buna	1	
400CSS	4" Female Coupler-4" Hose Shank	300	Buna	1	
400DSS	4" Female Coupler-4" Female Thread	300	Buna	1	
400ESS	4" Male Adapter-4" Hose Shank	300	N/A	1	
400FSS	4" Male Adapter-4" Male Thread	300	N/A	1	
400CAP/SS	4" Cap-Male Adapter	300	Buna	1	
400PL/SS	4" Plug-Female Coupler	300	N/A	1	

REPLACEMENT PARTS SS CAM ARM W/RING

PART NO	DESCRIPTION	QTY	PRICE EA
75K	¾" Cam Arm w/Ring	1	
100K	1" Cam Arm w/Ring	1	
150(200)K6	1½" & 2" Cam Arm w/Ring	1	
300K6	3" & 4" Cam Arm w/Ring	1	

REPLACEMENT PARTS SS COUPLING PINS & RINGS

PART NO	DESCRIPTION	QTY	PRICE EA
75P	¾" Pin	1	
100P	1" Pin	1	
200P	1½" & 2" Pin	1	
300MP	3" & 4" Pin	1	
100RING	¾" & 1" Ring	1	
150RING	1½", 2", 3" & 4" Ring	1	

REPLACEMENT PARTS SS COUPLING GASKETS

PART NO	DESCRIPTION	QTY	PRICE EA
75GV	¾" FKM (viton type) Gasket	100	
100GV	1" FKM (viton type) Gasket	100	
150GV	1½" FKM (viton type) Gasket	100	
200GV	2" FKM (viton type) Gasket	50	
300GV	3" FKM (viton type) Gasket	25	
400GV	4" FKM (viton type) Gasket	25	

REPLACEMENT PARTS SS COUPLING GASKETS

PART NO	DESCRIPTION	QTY	PRICE EA
75GB	¾" Buna Gasket	100	
100GB	1" Buna Gasket	100	
150GB	1½" Buna Gasket	100	
200GB	2" Buna Gasket	50	
300GB	3" Buna Gasket	25	
400GB	4" Buna Gasket	25	

Please order in bag/box quantities for quick and easy shipping and receiving of your order. All items priced each, not per bag or box quantity.

Polypropylene Cam Lever Couplings

FEATURES

- Stainless steel rings, arms & pins.
- Most complete line of polypropylene couplings available.
- Versatile — interchangeable with all types of cam lever couplers.
- Precision molded — insures a uniform and accurate fit.
- Durable — Polypropylene is glass reinforced for rugged strength and durability.
- Smooth operating — finger rings are designed for easy opening of cam levers.
- Complete series of ½", ¾", 1", 1¼", 1½", 2", 3" and 4" NPT thread.
- BSP threads available 1"- 3" sizes (excluding 1¼").
- Operating conditions:
  –3/8" thru 2" — 100 P.S.I. at 0°F; 125 P.S.I. at 70°F; 70 P.S.I. at 150°F.
  –2½", 3" & 4" Cap-50 P.S.I.; Couplings 75 P.S.I. max.
- Economical and superior in performance.
- Standard with EPDM gaskets. Buna "N", and FKM (viton type) also available.

WARNING: Couplings should not be disconnected under pressure or with liquid in the line.

A

B

C

D

E

F

PL

CAP

3 ARMS

303B & 303C & All 4" Couplings have 3 Arms for POSITIVE SEAL!

Please order in bag/box quantities for quick and easy shipping and receiving of your order. All items priced each, not per bag or box quantity.

CAM LEVER COUPLINGS

ITEM	DESCRIPTION	¼" *	3/8" *	½" *	¾"	1"	1¼" **	1½" x 1¼" ***	1½"	2"	2½"	3"	3" 3 ARMS	4" 3 ARMS
A	Male Adapter-Female Thread	75A1/4	75A3/8	75A1/2	75A3/4	100A	125A	150125A	150A	200A		300A		400A
B	Female Coupler- Male Thread			75B1/2	75B3/4	100B	125B	150125B	150B	200B		300B	303B	400B
C	Female Coupler-Hose Shank			050C	075C	100C	125C	150125C	150C	200C		300C	303C	400C
D	Female Coupler-Female Thread		075D3/8	050D	075D	100D	125D	150125D	150D	200D		300D		400D
E	Male Adapter-Hose Shank			050E	075E	100E	125E	150125E	150E	200E		300E		400E
F	Male Adapter-Male Thread			050F	075F	100F	125F	150125F	150F	200F		300F		400F
PL	Plug for Female Coupler			75PL	75PL	100125PL	100125PL	150PL	150PL	200PL	250PL	300PL		400PL
CAP	Cap for Male Adapter			075CAP	075CAP	100125CAP	100125CAP	150CAP	150CAP	200CAP	250CAP	300CAP		400CAP (2 arms)
CAPSH	Cap w/Short Arms							200CAPSH						

NOTE: *¼", 3/8" and ½" series couplings interchange with ¾" size couplings. Coupling ends are ¾" size.
**1¼" series couplings interchange with 1" size couplings. Coupling ends are 1" size.
***1½" x 1¼" couplings interchange with 1½" size couplings. Coupling ends are 1½" size.

CAM LEVER COUPLINGS

½" POLY CAM LEVER COUPLINGS

PART NO	DESCRIPTION	MAX PSI	GASKET	QTY	PRICE EA
75A1/2	¾" Male Adapter-½" Female Thread	125	N/A	10/bag	
75B1/2	¾" Female Coupler-½" Male Thread	125	EPDM	10/bag	
050C	¾" Female Coupler-½" Hose Shank	125	EPDM	10/bag	
050D	¾" Female Coupler-½" FemaleThread	125	EPDM	10/bag	
050E	¾" Male Adapter-½" Hose Shank	125	N/A	10/bag	
050F	¾" Male Adapter-½" Male Thread	125	N/A	10/bag	
075CAP	¾" Cap-Male Adapter	125	EPDM	10/bag	
75PL	¾" Plug-Female Coupler	125	N/A	10/bag	

¾" POLY CAM LEVER COUPLINGS

PART NO	DESCRIPTION	MAX PSI	GASKET	QTY	PRICE EA
75A3/4	¾" Male Adapter-¾" Female Thread	125	N/A	10/bag	
75B3/4	¾" Female Coupler-¾" Male Thread	125	EPDM	10/bag	
075C	¾" Female Coupler-¾" Hose Shank	125	EPDM	10/bag	
075D	¾" Female Coupler-¾" FemaleThread	125	EPDM	10/bag	
075E	¾" Male Adapter-¾" Hose Shank	125	N/A	10/bag	
075F	¾" Male Adapter-¾" Male Thread	125	N/A	10/bag	
075CAP	¾" Cap-Male Adapter	125	EPDM	10/bag	
75PL	¾" Plug-Female Coupler	125	N/A	10/bag	

¾" x ¼" POLY CAM LEVER COUPLINGS

PART NO	DESCRIPTION	MAX PSI	GASKET	QTY	PRICE EA
75A1/4	¾" Male Adapter-¼" Female Thread	125	N/A	10/bag	

¾" x ⅜" POLY CAM LEVER COUPLINGS

PART NO	DESCRIPTION	MAX PSI	GASKET	QTY	PRICE EA
75A3/8	¾" Male Adapter-⅜" Female Thread	125	N/A	10/bag	
075D3/8	¾" Female Coupler-⅜" FemaleThread	125	N/A	10/bag	

NOTE: ½" couplings interchange with ¾" couplings.
Banjo 1¼" Couplers & Adapters will interchange with 1" Couplings.
Only the Threads and Barbs are 1¼".

1" POLY CAM LEVER COUPLINGS

PART NO	DESCRIPTION	MAX PSI	GASKET	QTY	PRICE EA
100A	1" Male Adapter-1" Female Thread	125	N/A	10/bag	
100B	1" Female Coupler-1" Male Thread	125	EPDM	10/bag	
100C	1" Female Coupler-1" Hose Shank	125	EPDM	10/bag	
100D	1" Female Coupler-1" FemaleThread	125	EPDM	10/bag	
100E	1" Male Adapter-1" Hose Shank	125	N/A	10/bag	
100F	1" Male Adapter-1" Male Thread	125	N/A	10/bag	
100125CAP	1" Cap-Male Adapter	125	EPDM	10/bag	
100125PL	1" Plug-Female Coupler	125	N/A	10/bag	

1" x 1¼" POLY CAM LEVER COUPLINGS

PART NO	DESCRIPTION	MAX PSI	GASKET	QTY	PRICE EA
125A	1" Male Adapter-1¼" Female Thread	125	N/A	10/bag	
125B	1" Female Coupler-1¼" Male Thread	125	EPDM	10/bag	
125C	1" Female Coupler-1¼" Hose Shank	125	EPDM	10/bag	
125D	1" Female Coupler-1¼" FemaleThread	125	EPDM	10/bag	
125E	1" Male Adapter-1¼" Hose Shank	125	N/A	10/bag	
125F	1" Male Adapter-1¼" Male Thread	125	N/A	10/bag	
100125CAP	1" Cap-Male Adapter	125	EPDM	10/bag	
100125PL	1" Plug-Female Coupler	125	N/A	10/bag	

1½" x 1¼" POLY CAM LEVER COUPLINGS

PART NO	DESCRIPTION	MAX PSI	GASKET	QTY	PRICE EA
150125A	1½" Male Adapter-1¼" Female Thread	125	N/A	10/bag	
150125B	1½" Female Coupler-1¼" Male Thread	125	EPDM	1	
150125C	1½" Female Coupler-1¼" Hose Shank	125	EPDM	1	
150125D	1½" Female Coupler-1¼" FemaleThread	125	EPDM	1	
150125E	1½" Male Adapter-1¼" Hose Shank	125	N/A	10/bag	
150125F	1½" Male Adapter-1¼" Male Thread	125	N/A	10/bag	
150CAP	1½" Cap-Male Adapter	125	EPDM	1	
150PL	1½" Plug-Female Coupler	125	N/A	10/bag	

1½" POLY CAM LEVER COUPLINGS

PART NO	DESCRIPTION	MAX PSI	GASKET	QTY	PRICE EA
150A	1½" Male Adapter-1½" Female Thread	125	N/A	10/bag	
150B	1½" Female Coupler-1½" Male Thread	125	EPDM	1	
150C	1½" Female Coupler-1½" Hose Shank	125	EPDM	1	
150D	1½" Female Coupler-1½" FemaleThread	125	EPDM	1	
150E	1½" Male Adapter-1½" Hose Shank	125	N/A	10/bag	
150F	1½" Male Adapter-1½" Male Thread	125	N/A	10/bag	
150CAP	1½" Cap-Male Adapter	125	EPDM	1	
150PL	1½" Plug-Female Coupler	125	N/A	10/bag	

NOTE: 1½" x 1¼" couplings interchange with 1½" size couplings.
Coupling and Adapter ends are 1½" size. Only the threads and barbs are 1¼".

2" POLY CAM LEVER COUPLINGS

PART NO	DESCRIPTION	MAX PSI	GASKET	QTY	PRICE EA
200A	2" Male Adapter-2" Female Thread	125	N/A	10/bag	
200B	2" Female Coupler-2" Male Thread	125	EPDM	1	
201B	2" Female Coupler-2"Extended Male Thread	125	EPDM	1	
200C	2" Female Coupler-2" Hose Shank	125	EPDM	1	
200D	2" Female Coupler-2" FemaleThread	125	EPDM	1	
200E	2" Male Adapter-2" Hose Shank	125	N/A	10/bag	
200F	2" Male Adapter-2" Male Thread	125	N/A	10/bag	
200CAP	2" Cap-Male Adapter	125	EPDM	1	
200CAPSH	2" Cap-Male Adapter w/Short Arms	125	EPDM	1	
200PL	2" Plug-Female Coupler	125	N/A	10/bag	

2½" POLY CAM LEVER COUPLINGS

PART NO	DESCRIPTION	MAX PSI	GASKET	QTY	PRICE EA
250CAP	2½" Cap-Male Adapter	50	EPDM	1	
250PL	2½" Plug-Female Coupler	75	N/A	1	

Please order in bag/box quantities for quick and easy shipping and receiving of your order. All items priced each, not per bag or box quantity.

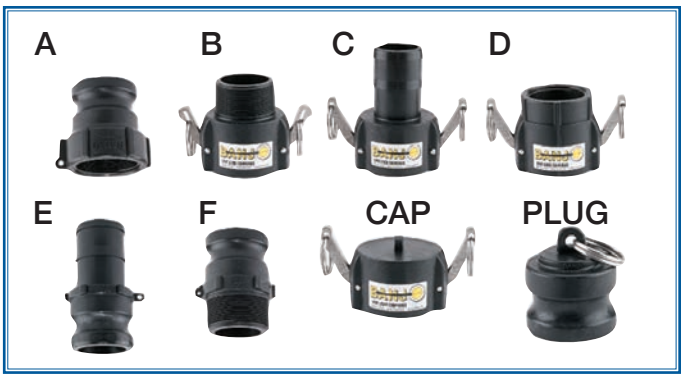

3" POLY CAM LEVER COUPLINGS

PART NO	DESCRIPTION	MAX PSI	GASKET	QTY	PRICE EA
300A	3" Male Adapter-3" Female Thread	75	N/A	1	
300B	3" Female Coupler-3" Male Thread	75	EPDM	1	
303B	3" Female Coupler-3" Extended Male Thread	75	EPDM	1	
300C	3" Female Coupler-3" Hose Shank	75	EPDM	1	
303C	3" Female Coupler w/3 Arms-3" Hose Shank	75	EPDM	1	
300D	3" Female Coupler-3" Female Thread	75	EPDM	1	
300E	3" Male Adapter-3" Hose Shank	75	N/A	1	
300F	3" Male Adapter-3" Male Thread	75	N/A	1	
300CAP	3" Cap-Male Adapter	50	EPDM	1	
300PL	3" Plug-Female Coupler	75	N/A	1	

4" w/3 ARMS POLY CAM LEVER COUPLINGS

PART NO	DESCRIPTION	MAX PSI	GASKET	QTY	PRICE EA
400A	4" Male Adapter-4" Female Thread	75	N/A	1	
400B	4" Female Coupler-4" Male Thread	75	EPDM	1	
400C	4" Female Coupler-4" Hose Shank	75	EPDM	1	
400D	4" Female Coupler-4" Female Thread	75	EPDM	1	
400E	4" Male Adapter-4" Hose Shank	75	N/A	1	
400F	4" Male Adapter-4" Male Thread	75	N/A	1	
400CAP	4" Cap-Male Adapter (w/2 arms)	50	EPDM	1	
400PL	4" Plug-Female Coupler	75	N/A	1	

SPOOL ADAPTERS

PART NO	DESCRIPTION	MAX PSI	GASKET	QTY	PRICE EA
200FF	2" Male Adapter-2" Male Adapter	125	N/A	1	
300F200F	3" Male Adapter-2" Male Adapter	125	N/A	1	
300FF	3" Male Adapter-3" Male Adapter	125	N/A	1	

REPLACEMENT PARTS POLY CAM ARM W/RING

PART NO	DESCRIPTION	QTY	PRICE EA
75K	½" & ¾" SS Cam Arm w/Ring	1	
100K	1" & 1¼" SS Cam Arm w/Ring	1	
150(200)K	1½" & 2" SS Cam Arm w/Ring	1	
300K	3" SS Cam Arm w/Ring	1	

REPLACEMENT PARTS POLY COUPLING PINS & RINGS

PART NO	DESCRIPTION	QTY	PRICE EA
75P	½" & ¾" Pin	1	
100P	1" & 1¼" Pin	1	
200P	1½" & 2" Pin	1	
300P	3" & 4" Pin	1	
100RING	½", ¾", 1" & 1¼" Ring	1	
150RING	1½", 2" & 3" Ring	1	

REPLACEMENT PARTS POLY COUPLING

PART NO	DESCRIPTION	QTY	PRICE EA
V20207	11" Lanyard	1	

Note: PTFE Gaskets available upon request.

Please order in bag/box quantities for quick and easy shipping and receiving of your order. All items priced each, not per bag or box quantity.

REPLACEMENT PARTS POLY COUPLING GASKETS

PART NO	DESCRIPTION	QTY	PRICE EA
75G	½" & ¾" EPDM Gasket	100/bag	
75GB	½" & ¾" Buna Gasket	100/bag	
75GV	½" & ¾" FKM (viton type) Gasket	100/bag	
075GXT	½" & ¾" Extra Thick EPDM Gasket	100/bag	
100G	1" & 1¼" EPDM Gasket	100/bag	
100GB	1" & 1¼" Buna Gasket	100/bag	
100GV	1" & 1¼" FKM (viton type) Gasket	100/bag	
100GXT	1" & 1¼" Extra Thick EPDM Gasket	100/bag	
150G	1½" EPDM Gasket	100/bag	
150GB	1½" Buna Gasket	100/bag	
150GV	1½" FKM (viton type) Gasket	100/bag	
150GXT	1½" Extra Thick EPDM Gasket	100/bag	
150GXTV	1½" Extra Thick FKM (viton type) Gasket	1/bag	
200G	2" EPDM Gasket	50/bag	
200GB	2" Buna Gasket	50/bag	
200GV	2" FKM (viton type) Gasket	50/bag	
200GXT	2" Extra Thick EPDM Gasket	50/bag	
200GXTV	2" Extra Thick FKM (viton type) Gasket	1/bag	
250G	2½" EPDM Gasket	50/bag	
300G	3" EPDM Gasket	25/bag	
300GB	3" Buna Gasket	25/bag	
300GV	3" FKM (viton type) Gasket	25/bag	
300GXT	3" Extra Thick EPDM Gasket	25/bag	
300GVXT	3" Extra Thick FKM (viton type) Gasket	1/bag	
400G	4" EPDM Gasket	25/bag	
400GB	4" Buna Gasket	25/bag	
400GV	4" FKM (viton type) Gasket	25/bag	
400GXT	4" Extra Thick EPDM Gasket	25/bag	

Locking Cam Lever Poly Couplings

PATENT PENDING

Easy Action Locking Lever!

FEATURES

- All stainless steel construction.
- Easy action lever.
- Excellent for high vibration applications.

1½" POLY LOCKING CAM LEVER COUPLINGS					
PART NO	DESCRIPTION	MAX PSI	GASKET	QTY	PRICE EA
L150B	1½" Female Coupler-Male Thread	125	EPDM	1	
L150C	1½" Female Coupler-Hose Shank	125	EPDM	1	
L150D	1½" Female Coupler-Female Thread	125	EPDM	1	
L150CAP	1½" Cap-Male Adapter	125	EPDM	1	

2" POLY LOCKING CAM LEVER COUPLINGS					
PART NO	DESCRIPTION	MAX PSI	GASKET	QTY	PRICE EA
L200B	2" Female Coupler-Male Thread	125	EPDM	1	
L200C	2" Female Coupler-Hose Shank	125	EPDM	1	
L200D	2" Female Coupler-Female Thread	125	EPDM	1	
L200CAP	2" Cap-Male Adapter	125	EPDM	1	

WARNING: Locking Cam Arm Lever is not intended to be used as a security device or to prevent unauthorized opening of coupling assembly.

1½" & 2" POLY LOCKING CAM ARM W/RING & PIN					
PART NO	DESCRIPTION	MAX PSI	GASKET	QTY	PRICE EA
200KL	2" Locking Cam Arm w/Ring	N/A	N/A	1	
200PKL	2" Coupling Pin	N/A	N/A	1	

Note: Fits 1½" & 2" Poly Couplings Only

2" x 1½" PART C					
PART NO	DESCRIPTION	MAX PSI	GASKET	QTY	PRICE EA
200150C	2" Female Coupler- 1½" Hose Shank	125	EPDM	1	

3" w/3 ARMS POLY CAM LEVER COUPLINGS					
PART NO	DESCRIPTION	MAX PSI	GASKET	QTY	PRICE EA
303B200A	3" Female Coupler w/3 Arms-2" Male Adapter	75	EPDM	1	

201B

303B

303C

POLY CAM LEVER COUPLINGS					
PART NO	DESCRIPTION	MAX PSI	GASKET	QTY	PRICE EA
201B	2" Female Coupler-2" Extended Male Thread	125	EPDM	1	
303B	3" Female Coupler-3" Extended Male Thread	75	EPDM	1	
303C	3" Female Coupler w/3 Arms-3" Hose Shank	75	EPDM	1	

1½" & 2" Polypropylene 90° Couplings

FEATURES

- Precision molded in polypropylene, reinforced with fiberglass for strength and durability.
- Stainless steel rings, cam levers and pins resist corrosion.
- Banjo 90° angle couplings and adapters will reduce the number of elbows and other pipe fittings used in plumbing applications.

A

B

C

D

FSWP

F

1½" 90° POLY CAM LEVER COUPLINGS					
PART NO	DESCRIPTION	MAX PSI	GASKET	QTY	PRICE EA
150A90	1½" 90° Male Adapter-1½" Female Thread	125	EPDM	1	
150C90	1½" 90° Female Coupler-1½" Hose Shank	125	EPDM	1	
150D90	1½" 90° Female Coupler-1½" Female Thread	125	EPDM	1	
150F90	1½" 90° Male Adapter-1½" Male Thread	125	EPDM	1	

2" 90° POLY CAM LEVER COUPLINGS					
PART NO	DESCRIPTION	MAX PSI	GASKET	QTY	PRICE EA
200A90	2" 90° Male Adapter-2" Female Thread	125	EPDM	1	
200B90	2" 90° Female Coupler-2" Male Thread	125	EPDM	1	
200C90	2" 90° Female Coupler-2" Hose Shank	125	EPDM	1	
200D90	2" 90° Female Coupler-2" Female Thread	125	EPDM	1	
200F90	2" 90° Male Adapter-2" Male Thread	125	EPDM	1	
220FSWP90	2" Male Adapter w/90° Sweep - 2" Male Thread	125	EPDM	1	

2" Polypropylene 45° Couplings

WARNING: Couplings should not be disconnected under pressure or with liquid in the line.

F

2" 45° POLY CAM LEVER COUPLINGS					
PART NO	DESCRIPTION	MAX PSI	GASKET	QTY	PRICE EA
200F45	2" 45° Male Adapter-2" Male Thread	125	N/A	1	

Polypropylene Switch-a-Roos

FEATURES

- The Switch-A-Roo is a fast, convenient method of changing spray nozzles on fertilizer application equipment.
- Precision molded in polypropylene (fiberglass reinforced) for high strength and toughness.
- The female coupling is available in either ½" or ¾" pipe thread and normally mounted on the spray boom.
- The male adapter is available in four different thread sizes ¼", ⅜", ½", and ¾" to fit all size spray nozzles.
- Switch-A-Roo's available with self-aligning grooves.

Please order in bag/box quantities for quick and easy shipping and receiving of your order. All items priced each, not per bag or box quantity.

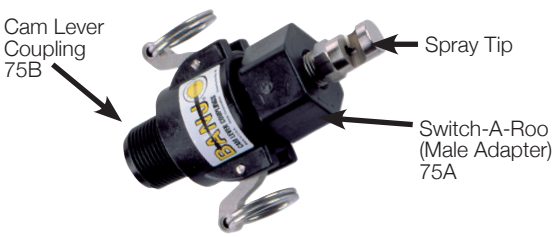

POLY SWITCH-A-ROOS			
PART NO	DESCRIPTION	QTY	PRICE EA
75A1/4/SA	¾" Male Adapter-¼" w/Self-aligning Groove	10/bag	
75A3/8/SA	¾" Male Adapter-⅜" w/Self-aligning Groove	10/bag	
75A1/2/SA	¾" Male Adapter-½" w/Self-aligning Groove	10/bag	
75A3/4/SA	¾" Male Adapter-¾" w/Self-aligning Groove	10/bag	
75B1/2	¾" Female Coupler-½" Male Thread	10/bag	
75B3/4	¾" Female Coupler-¾" Male Thread	10/bag	

¾" Female Coupler

¾" Male Adapter

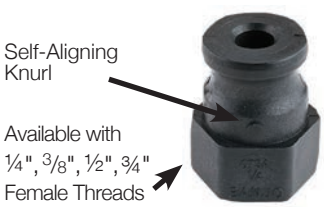

Garden Hose Fittings

FEATURES

- Quick and simple way to connect and disconnect your garden hose.
- Easily connects hose to spigot, sprinkler, nozzle or other hose end accessories.
- Durable, rustproof polypropylene construction.
- Never have to use pliers to tighten to prevent leaks.
- Yellow fiberglass reinforced polypropylene.
- Standard ¾" opening diameter.

A

GHFT075A

B

GHMT075B

GHFT075MPT

GHMT075MPT

A

B

D

GHFT075D

F

GHMT075F

GHMT075FPT

D

F

GARDEN HOSE FITTINGS			
PART NO	DESCRIPTION	QTY	PRICE EA
GHFT075A	¾" Adapter x ¾" Garden Hose Female Thread	1	
GHMT075B	¾" Coupler x ¾" Garden Hose Male Thread	1	
GHFT075D	¾" Coupler x ¾" Garden Hose Female Thread	1	
GHMT075F	¾" Adapter x ¾" Garden Hose Male Thread	1	
GHFT075MPT	¾" Male NPT x ¾" Garden Hose Female Thread	1	
GHMT075FPT	¾" Female NPT x ¾" Garden Hose Male Thread	1	
GHMT075MPT	¾" Male NPT x ¾" Garden Hose Male Thread	1	

Garden Hose Spray Nozzle

FEATURES

- Heavy-duty machined aluminum construction stands up to hard use.
- Comfort-grip soft rubber provides a comfortable gripping texture.
- Resists dents, mars and scratches and also protects any surface that comes in contact with nozzle.
- Aluminum hose connection provides a tight fit, will not rust.
- Multiple spray pattern adjusts from a powerful jet stream to a gentle fan spray. Ideal for all your spraying needs.
- Stainless steel spray cap for precise spray patterns.

Spray nozzle patterns

GARDEN HOSE SPRAY NOZZLE			
PART NO	DESCRIPTION	QTY	PRICE EA
GHN075	¾" Garden Hose Spray Nozzle	1	

Two Barrel Hardware Clamps

FEATURES

- Perfect for tight, hard to reach spaces!
- Minimizes parts that protrude by tightening together versus tightening away from.
- Deep socket tools not required.
- 300 Stainless steel construction.

TWO BARREL HARDWARE CLAMPS					
PART NO	DESCRIPTION	MIN/MAX DIAMETER	MAX TORQUE	QTY	PRICE EA
BC090	¾" 300 SS Floating Bridgew/Lockwasher	0.91"/0.98"	75 in-lbs	1	
BC114	1" 300 SS Floating Bridge w/Lockwasher	1.14"/1.22"	75 in-lbs	1	

BANJO MAN			
PART NO	DESCRIPTION	QTY	PRICE EA
BANJOMAN	18" x 29"- Assembly Required	1	

Banjo Super Clamps

FEATURES

- Stainless steel construction.
- 304 Stainless steel bolt with 316 SS nut to prevent seizing.
- 360° sealing surface.
- Ideal for high torque applications.
- Strong, positive connections where ordinary hose clamps fail.
- T-bolt design.
- 3 spot welds for extra strength.

Sold in Bags of 10 ONLY! Priced per clamp!

Torque Specifications: Working Torque: 50-80 inch pounds.
Maximum Torque: 125 inch pounds

BANJO SUPER CLAMPS					
PART NO	DESCRIPTION	MIN/MAX DIAMETER	MAX TORQUE	QTY	PRICE EA
TC120	1" T-Bolt Hose Clamp	1.20"/1.34"	75 in-lbs	10/bag	
TC130	1¼" T-Bolt Hose Clamp	1.30"/1.70"	75 in-lbs	10/bag	
TC150	1½" T-Bolt Hose Clamp	1.50"/1.75"	125 in-lbs	10/bag	
TC162	1¼" T-Bolt Hose Clamp	1.62"/1.87"	125 in-lbs	10/bag	
TC181	1½" T-Bolt Hose Clamp	1.81"/2.06"	125 in-lbs	10/bag	
TC193	1½" T-Bolt Hose Clamp	1.93"/2.18"	125 in-lbs	10/bag	
TC206	2" T-Bolt Hose Clamp	2.06"/2.40"	125 in-lbs	10/bag	
TC218	2" T-Bolt Hose Clamp	2.18"/2.50"	125 in-lbs	10/bag	
TC224	2" T-Bolt Hose Clamp	2.24"/2.55"	125 in-lbs	10/bag	
TC231	2" T-Bolt Hose Clamp	2.31"/2.62"	125 in-lbs	10/bag	
TC250	2" T-Bolt Hose Clamp	2.50"/2.81"	125 in-lbs	10/bag	
TC287	2" T-Bolt Hose Clamp	2.87"/3.18"	125 in-lbs	10/bag	
TC312	3" T-Bolt Hose Clamp	3.12"/3.49"	125 in-lbs	10/bag	
TC331	3" T-Bolt Hose Clamp	3.31"/3.62"	125 in-lbs	10/bag	
TC343	3" T-Bolt Hose Clamp	3.50"/3.82"	125 in-lbs	10/bag	
TC425	4" T-Bolt Hose Clamp	4.25"/4.56"	125 in-lbs	10/bag	
TC438	4" T-Bolt Hose Clamp	4.38"/4.76"	125 in-lbs	10/bag	
TC456	4" T-Bolt Hose Clamp	4.56"/4.94"	125 in-lbs	10/bag	

FEATURES

- Glass reinforced polypropylene.
- Heavy duty (Schedule 80).
- Lightweight with excellent strength.
- NPT threads.
- Excellent chemical resistance.
- Pressure to 300 P.S.I. at 70°F.

POLY NIPPLES

PART NO	DESCRIPTION	QTY	PRICE EA
NIP025-SH	¼" Short Poly Nipple	10/bag	
NIP038-SH	⅜" Short Poly Nipple	10/bag	
NIP050-SH	½" Short Poly Nipple	10/bag	
NIP050-3	½" x 3" Poly Nipple	10/bag	
NIP075-SH	¾" Short Poly Nipple	10/bag	
NIP075-4	¾" x 4" Poly Nipple	10/bag	
NIP075-6	¾" x 6" Poly Nipple	10/bag	
NIP100-SH	1" Short Poly Nipple	10/bag	
NIP100-4	1" x 4" Poly Nipple	10/bag	
NIP100-6	1" x 6" Poly Nipple	10/bag	
NIP125-SH	1¼" Short Poly Nipple	10/bag	
NIP125-4	1¼" x 4" Poly Nipple	10/bag	
NIP125-6	1¼" x 6" Poly Nipple	10/bag	
NIP150-SH	1½" Short Poly Nipple	10/bag	
NIP150-3	1½" x 3" Poly Nipple	10/bag	
NIP150-4	1½" x 4" Poly Nipple	10/bag	
NIP150-5	1½" x 5" Poly Nipple	10/bag	
NIP150-6	1½" x 6" Poly Nipple	10/bag	
NIP200-SH	2" Short Poly Nipple	10/bag	
NIP200-4	2" x 4" Poly Nipple	10/bag	
NIP200-6	2" x 6" Poly Nipple	10/bag	
NIP300-SH	3" Short Poly Nipple	1	
NIP300-4	3" x 4" Poly Nipple	1	
NIP300-6	3" x 6" Poly Nipple	1	
NIP400-SH	4" Short Poly Nipple	1	

Please order in bag/box quantities for quick and easy shipping and receiving of your order. All items priced each, not per bag or box quantity.

POLY REDUCING NIPPLES

PART NO	DESCRIPTION	QTY	PRICE EA
RN050-038	½" x ⅜" Poly Reducing Nipple	10/bag	
RN075-050	¾" x ½" Poly Reducing Nipple	10/bag	
RN100-050	1" x ½" Poly Reducing Nipple	10/bag	
RN100-075	1" x ¾" Poly Reducing Nipple	10/bag	
RN125-075	1¼" x ¾" Poly Reducing Nipple	10/bag	
RN125-100	1¼" x 1" Poly Reducing Nipple	10/bag	
RN150-100	1½" x 1" Poly Reducing Nipple	10/bag	
RN150-125	1½" x1¼" Poly Reducing Nipple	10/bag	
RN200-125	2" x 1¼" Poly Reducing Nipple	10/bag	
RN200-150	2" x 1½" Poly Reducing Nipple	10/bag	
RN300-200	3" x 2" Poly Reducing Nipple	1	

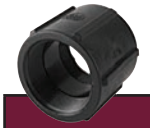

POLY PIPE COUPLINGS

PART NO	DESCRIPTION	QTY	PRICE EA
CPLG025	¼" Poly Pipe Coupling	10/bag	
CPLG038	⅜" Poly Pipe Coupling	10/bag	
CPLG050	½" Poly Pipe Coupling	10/bag	
CPLG075	¾" Poly Pipe Coupling	10/bag	
CPLG100	1" Poly Pipe Coupling	10/bag	
CPLG125	1¼" Poly Pipe Coupling	10/bag	
CPLG150	1½" Poly Pipe Coupling	10/bag	
CPLG200	2" Poly Pipe Coupling	10/bag	
CPLG300	3" Poly Pipe Coupling	1	

POLY REDUCING COUPLINGS

PART NO	DESCRIPTION	QTY	PRICE EA
RC100-075	1" x ¾" Poly Reducing Coupling	10/bag	
RC150-100	1½" x 1" Poly Reducing Coupling	10/bag	
RC150-125	1½" x1¼" Poly Reducing Coupling	10/bag	
RC200-050	2" x ½" Poly Reducing Coupling	10/bag	
RC200-100	2" x 1" Poly Reducing Coupling	10/bag	
RC200-125	2" x 1¼" Poly Reducing Coupling	10/bag	
RC200-150	2" x 1½" Poly Reducing Coupling	10/bag	
RC300-200	3" x 2" Poly Reducing Coupling	1	

POLY REDUCING BUSHING

PART NO	DESCRIPTION	QTY	PRICE EA
RB038-025	⅜" MPT x ¼" FPT Reducing Bushing	10/bag	
RB050-018	½" MPT x ⅛" FPT Reducing Bushing	10/bag	
RB050-025	½" MPT x ¼" FPT Reducing Bushing	10/bag	
RB050-038	½" MPT x ⅜" FPT Reducing Bushing	10/bag	
RB075-018	¾" MPT x ⅛" FPT Reducing Bushing	10/bag	
RB075-025	¾" MPT x ¼" FPT Reducing Bushing	10/bag	
RB075-038	¾" MPT x ⅜" FPT Reducing Bushing	10/bag	
RB075-050	¾" MPT x ½" FPT Reducing Bushing	10/bag	
RB100-018	1" MPT x ⅛" FPT Reducing Bushing	10/bag	
RB100-025	1" MPT x ¼" FPT Reducing Bushing	10/bag	
RB100-050	1" MPT x ½" FPT Reducing Bushing	10/bag	
RB100-075	1" MPT x ¾" FPT Reducing Bushing	10/bag	
RB125-038	1¼" MPT x ⅜" FPT Reducing Bushing	10/bag	
RB125-075	1¼" MPT x ¾" FPT Reducing Bushing	10/bag	
RB125-100	1¼" MPT x 1" FPT Reducing Bushing	10/bag	
RB150-075	1½" MPT x ¾" FPT Reducing Bushing	10/bag	
RB150-100	1½" MPT x 1" FPT Reducing Bushing	10/bag	
RB150-125	1½" MPT x1¼" FPT Reducing Bushing	10/bag	
RB200-075	2" MPT x ¾" FPT Reducing Bushing	10/bag	
RB200-100	2" MPT x 1" FPT Reducing Bushing	10/bag	
RB200-125	2" MPT x 1¼" FPT Reducing Bushing	10/bag	
RB200-150	2" MPT x 1½" FPT Reducing Bushing	10/bag	
RB300-150	3" MPT x 1½" FPT Reducing Bushing	1	
RB300-200	3" MPT x 2" FPT Reducing Bushing	1	
RB400-300	4" MPT x 3" FPT Reducing Bushing	1	

Polypropylene Pipe Fittings

- Glass reinforced polypropylene.
- Heavy duty (Schedule 80).
- Lightweight with excellent strength.
- NPT threads.
- Excellent chemical resistance.
- Pressure to 300 P.S.I. at 70°F.

Please order in bag/box quantities for quick and easy shipping and receiving of your order. All items priced each, not per bag or box quantity.

POLY PIPE CAPS

PART NO	DESCRIPTION	QTY	PRICE EA
CAP025	¼" Poly Pipe Cap	10/bag	
CAP038	⅜" Poly Pipe Cap	10/bag	
CAP050	½" Poly Pipe Cap	10/bag	
CAP075	¾" Poly Pipe Cap	10/bag	
CAP100	1" Poly Pipe Cap	10/bag	
CAP125	1¼" Poly Pipe Cap	10/bag	
CAP150	1½" Poly Pipe Cap	10/bag	
CAP200	2" Poly Pipe Cap	10/bag	
CAP300	3" Poly Pipe Cap	1	

POLY CROSSES

PART NO	DESCRIPTION	QTY	PRICE EA
CR025	¼" Poly Cross	10/bag	
CR038	⅜" Poly Cross	10/bag	
CR050	½" Poly Cross	5/bag	
CR075	¾" Poly Cross	5/bag	
CR100	1" Poly Cross	5/bag	
CR125	1¼" Poly Cross	1	
CR150	1½" Poly Cross	1	
CR200	2" Poly Cross	1	

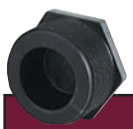

POLY PIPE PLUGS

PART NO	DESCRIPTION	QTY	PRICE EA
PLUG025	¼" Poly Pipe Plug	10/bag	
PLUG038	⅜" Poly Pipe Plug	10/bag	
PLUG050	½" Poly Pipe Plug	10/bag	
PLUG075	¾" Poly Pipe Plug	10/bag	
PLUG100	1" Poly Pipe Plug	10/bag	
PLUG125	1¼" Poly Pipe Plug	10/bag	
PLUG150	1½" Poly Pipe Plug	10/bag	
PLUG200	2" Poly Pipe Plug	10/bag	
PLUG300	3" Poly Pipe Plug	1	

POLY TEES

PART NO	DESCRIPTION	QTY	PRICE EA
TEE025	¼" Poly Tee	10/bag	
TEE038	⅜" Poly Tee	10/bag	
TEE050	½" Poly Tee	10/bag	
TEE075	¾" Poly Tee	10/bag	
TEE100	1" Poly Tee	10/bag	
TEE125	1¼" Poly Tee	10/bag	
TEE150	1½" Poly Tee	1	
TEE200	2" Poly Tee	1	
TEE300	3" Poly Tee	1	

POLY CROSSES

PART NO	DESCRIPTION	QTY	PRICE EA
HBC050075	½" x ¾" Hose Barb Cross	1	

POLY GAUGE TEE (GAUGE NOT INCLUDED)

PART NO	DESCRIPTION	QTY	PRICE EA
TEG075	¾" Poly Tee w/ ¼" Female Thread	10/bag	
TEG100	1" Poly Tee w/ ¼" Female Thread	10/bag	

90° POLY ELBOWS

PART NO	DESCRIPTION	QTY	PRICE EA
EL025-90	¼" 90° Poly Elbow	10/bag	
EL038-90	⅜" 90° Poly Elbow	10/bag	
EL050-90	½" 90° Poly Elbow	10/bag	
EL075-90	¾" 90° Poly Elbow	10/bag	
EL100-90	1" 90° Poly Elbow	10/bag	
EL125-90	1¼" 90° Poly Elbow	10/bag	
EL150-90	1½" 90° Poly Elbow	10/bag	
EL200-90	2" 90° Poly Elbow	1	
EL300-90	3" 90° Poly Elbow	1	

90° POLY HOSE BARB ELBOW

PART NO	DESCRIPTION	QTY	PRICE EA
HBEL100-90	1" 90° Poly Hose Barb Elbow	10/bag	

45° POLY ELBOW

PART NO	DESCRIPTION	QTY	PRICE EA
EL100-45	1" 45° Poly Street Elbow	10/bag	

90° POLY HOSE BARB ELBOW

PART NO	DESCRIPTION	QTY	PRICE EA
HBB20012590	2" x 1¼" 90° Poly Hose Barb Elbow	10/bag	

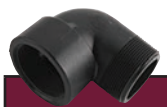

90° POLY STREET ELBOWS

PART NO	DESCRIPTION	QTY	PRICE EA
SL025-90	¼" 90° Poly Street Elbow	10/bag	
SL038-90	⅜" 90° Poly Street Elbow	10/bag	
SL050-90	½" 90° Poly Street Elbow	10/bag	
SL075-90	¾" 90° Poly Street Elbow	10/bag	
SL100-90	1" 90° Poly Street Elbow	10/bag	
SL125-90	1¼" 90° Poly Street Elbow	10/bag	
SL150-90	1½" 90° Poly Street Elbow	10/bag	
SL200-90	2" 90° Poly Street Elbow	10/bag	
SL300-90	3" 90° Poly Street Elbow	1	

90° POLY HOSE BARB ELBOW

PART NO	DESCRIPTION	QTY	PRICE EA
HBEL150/100-90	1½" x 1" 90° Poly Hose Barb Elbow	1	

Please order in bag/box quantities for quick and easy shipping and receiving of your order. All items priced each, not per bag or box quantity.

45° POLY STREET ELBOWS

PART NO	DESCRIPTION	QTY	PRICE EA
SL075-45	¾" 45° Poly Street Elbow	10/bag	
SL100-45	1" 45° Poly Street Elbow	10/bag	
SL125-45	1¼" 45° Poly Street Elbow	10/bag	
SL150-45	1½" 45° Poly Street Elbow	10/bag	
SL200-45	2" 45° Poly Street Elbow	10/bag	
SL300-45	3" 45° Poly Street Elbow	1	

Polypropylene Pipe Fittings

- Glass reinforced polypropylene.
- Heavy duty (Schedule 80).
- Lightweight with excellent strength.
- NPT threads.
- Excellent chemical resistance.
- ¼" - 2" hose barbs pressure to 300 P.S.I. at 70°F.
- 3" hose barbs pressure to 225 P.S.I. at 70°F.
- Stainless steel hose barbs to 300 P.S.I. at 70°F.

POLY STRAIGHT HOSE BARBS

PART NO	DESCRIPTION	QTY	PRICE EA
HB025	¼" Male Thread x ¼" Hose Barb	10/bag	
HB025-038	¼" Male Thread x ⅜" Hose Barb	10/bag	
HB025-050	¼" Male Thread x ½" Hose Barb	10/bag	
HB038	⅜" Male Thread x ⅜" Hose Barb	10/bag	
HB038-025	⅜" Male Thread x ¼" Hose Barb	10/bag	
HB038-050	⅜" Male Thread x ½" Hose Barb	10/bag	
HB050-025	½" Male Thread x ¼" Hose Barb	10/bag	
HB050-038	½" Male Thread x ⅜" Hose Barb	10/bag	
HB050	½" Male Thread x ½" Hose Barb	10/bag	
HB050-075	½" Male Thread x ¾" Hose Barb	10/bag	
HB075-038	¾" Male Thread x ⅜" Hose Barb	10/bag	
HB075-050	¾" Male Thread x ½" Hose Barb	10/bag	
HB075-058	¾" Male Thread x ⅝" Hose Barb	10/bag	
HB075	¾" Male Thread x ¾" Hose Barb	10/bag	
HB075-100	¾" Male Thread x 1" Hose Barb	10/bag	
HB100-075	1" Male Thread x ¾" Hose Barb	10/bag	
HB100	1" Male Thread x 1" Hose Barb	10/bag	
HB100-125	1" Male Thread x 1¼" Hose Barb	10/bag	
HB125-075	1¼" Male Thread x ¾" Hose Barb	10/bag	
HB125-100	1¼" Male Thread x 1" Hose Barb	10/bag	
HB125	1¼" Male Thread x 1¼" Hose Barb	10/bag	
HB125-150	1¼" Male Thread x 1½" Hose Barb	10/bag	
HB150-100	1½" Male Thread x 1" Hose Barb	10/bag	
HB150-125	1½" Male Thread x 1¼" Hose Barb	10/bag	
HB150	1½" Male Thread x 1½" Hose Barb	10/bag	
HB150-200	1½" Male Thread x 2" Hose Barb	10/bag	
HB200-150	2" Male Thread x 1½" Hose Barb	10/bag	
HB200	2" Male Thread x 2" Hose Barb	10/bag	
HB300	3" Male Thread x 3" Hose Barb	1	
HB400	4" Male Thread x 4" Hose Barb	1	

POLY FEMALE HOSE BARBS

PART NO	DESCRIPTION	QTY	PRICE EA
HBF075	¾" Female Thread	10/bag	
HBF075-100	¾" Female Thread x 1" Hose Shank	10/bag	
HBF100	1" Female Thread x 1" Hose Shank	10/bag	

Please order in bag/box quantities for quick and easy shipping /receiving of your order. Use BANJO Part Numbers when ordering. All items priced each, not per bag or box quantity.

POLY 90° HOSE BARBS

PART NO	DESCRIPTION	QTY	PRICE EA
HB025-90	¼" Male Thread x ¼" 90° Hose Barb	10/bag	
HB025/038-90	¼" Male Thread x ⅜" 90° Hose Barb	10/bag	
HB025/050-90	¼" Male Thread x ½" 90° Hose Barb	10/bag	
HB038-90	⅜" Male Thread x ⅜" 90° Hose Barb	10/bag	
HB050/038-90	½" Male Thread x ⅜" 90° Hose Barb	10/bag	
HB050-90	½" Male Thread x ½" 90° Hose Barb	10/bag	
HB050/075-90	½" Male Thread x ¾" 90° Hose Barb	10/bag	
HB075/050-90	¾" Male Thread x ½" 90° Hose Barb	10/bag	
HB075-90	¾" Male Thread x ¾" 90° Hose Barb	10/bag	
HB075/100-90	¾" Male Thread x 1" 90° Hose Barb	10/bag	
HB100/075-90	1" Male Thread x ¾" 90° Hose Barb	10/bag	
HB100-90	1" Male Thread x 1" 90° Hose Barb	10/bag	
HB100/125-90	1" Male Thread x 1¼" 90° Hose Barb	10/bag	
HB125/100-90	1¼" Male Thread x 1" 90° Hose Barb	10/bag	
HB125-90	1¼" Male Thread x 1¼" 90° Hose Barb	10/bag	
HB125/150-90	1¼" Male Thread x 1½" 90° Hose Barb	10/bag	
HB150/125-90	1½" Male Thread x 1¼" 90° Hose Barb	10/bag	
HB150-90	1½" Male Thread x 1½" 90° Hose Barb	10/bag	
HB200/150-90	2" Male Thread x 1½" 90° Hose Barb	10/bag	
HB200-90	2" Male Thread x 2" 90° Hose Barb	10/bag	
HB300-90	3" Male Thread x 3" 90° Hose Barb	1	

316 SS HOSE BARBS

PART NO	DESCRIPTION	QTY	PRICE EA
HB025SS	¼" Male Thread x ¼" Hose Shank	1	
HB025-038SS	¼" Male Thread x ⅜" Hose Shank	1	
HB025-050SS	¼" Male Thread x ½" Hose Shank	1	
HB038SS	⅜" Male Thread x ⅜" Hose Shank	1	
HB038-050SS	⅜" Male Thread x ½" Hose Shank	1	
HB050SS	½" Male Thread x ½" Hose Shank	1	
HB050-058SS	½" Male Thread x ⅝" Hose Shank	1	
HB050-075SS	½" Male Thread x ¾" Hose Shank	1	
HB075-050SS	¾" Male Thread x ½" Hose Shank	1	
HB075SS	¾" Male Thread x ¾" Hose Shank	1	
HB075-100SS	¾" Male Thread x 1" Hose Shank	1	
HB100-075SS	1" Male Thread x ¾" Hose Shank	1	
HB100SS	1" Male Thread x 1" Hose Shank	1	
HB125SS	1¼" Male Thread x 1¼" Hose Shank	1	
HB150SS	1½" Male Thread x 1½" Hose Shank	1	
HB200SS	2" Male Thread x 2" Hose Shank	1	
HB300SS	3" Male Thread x 3" Hose Shank	1	

POLY HOSE BARB TEES

PART NO	DESCRIPTION	QTY	PRICE EA
HBT025	¼" Hose Barb Tee	10/bag	
HBT038	⅜" Hose Barb Tee	10/bag	
HBT050-038	½" x ½" x ⅜" Hose Barb Tee	10/bag	
HBT050	½" Hose Barb Tee	10/bag	
HBT050-075	½" x ½" x ¾" Hose Barb Tee	10/bag	
HBT075-050	¾" x ¾" x ½" Hose Barb Tee	10/bag	
HBT075	¾" Hose Barb Tee	10/bag	
HBT075-100	¾" x ¾" x 1" Hose Barb Tee	10/bag	
HBT100-075	1" x 1" x ¾" Hose Barb Tee	10/bag	
HBT100-100	1" x 1" x 1" Hose Barb Tee	10/bag	
HBT100	1" Hose Barb Tee	10/bag	
HBT200	2" Hose Barb Tee	1	
HBT300	3" Hose Barb Tee	1	

POLY HOSE BARB THREADED TEES

PART NO	DESCRIPTION	QTY	PRICE EA
HBT100-100	1" Hose Barb x 1" Hose Barb x 1" Male Thread Hose Barb Tee	1	
HBT150-100	1½" Hose Barb x 1½" Hose Barb x 1" Male Thread Hose Barb Tee	1	
HBT150-150	1½" Hose Barb x 1½" Hose Barb x1½" Male Thread Hose Barb Tee	1	

Please order in bag/box quantities for quick and easy shipping and receiving of your order. All items priced each, not per bag or box quantity.

POLY HOSE MENDERS

PART NO	DESCRIPTION	QTY	PRICE EA
HM025	¼" x ¼" Hose Barb	10/bag	
HM038	⅜" x ⅜" Hose Barb	10/bag	
HM050	½" x ½" Hose Barb	10/bag	
HM075	¾" x ¾" Hose Barb	10/bag	
HM100	1" x 1" Hose Barb	10/bag	
HM125	1¼" x 1¼" Hose Barb	10/bag	
HM150	1½" x 1½" Hose Barb	10/bag	
HM200	2" x 2" Hose Barb	10/bag	
HM300	3" x 3" Hose Barb	1	

NEW Full Port Swivel!

POLY SWIVEL

PART NO	DESCRIPTION	MAX PSI	QTY	PRICE EA
SW100	1" Male x 1" Female Swivel	75	1	
SW150	1½" Male x 1½" Female Swivel	75	1	
SW200	2" Male x 2" Female Swivel	75	1	
SW220	2" Full Port Male x 2" Full Port Female Swivel	75	1	

8 STATION POLY MANIFOLD

PART NO	DESCRIPTION	QTY	PRICE EA
TM075/050	8 Station Manifold ¾" Inlet x ½" Outlet, ¼" Gauge Port	1	

Recommended procedure for sealing pipe threads:

We DO NOT recommend using pipe tape. Pipe tape enlarges the outside diameter of the male thread and may cause the female thread to split. We recommend using a pipe thread sealant. Use on clean tapered threads. Apply a thick even coat on male threads using brush applicator. For pipe diameters smaller than 1¼" apply to male threads only. For 1¼" and larger sizes apply to both male and female threads. Avoid applying excessive amounts. Hand tighten joints and then torque another ½ to ¾ turn until threads seal.

RectorSeal® No. 21™: This is a slow drying, soft set multi-purpose sealant designed for use where black is preferred. 8 oz. can with brush in the cap. Conforms to TT-S-1732.

RectorSeal® Tru-Blu™: This is a fast drying, flexible set thread sealant designed for high vibration environments. Teflon®* has been added to enhance thread lubrication during assembly and break out. 8 oz. can with brush in the cap. Conforms to TT-S-1732.

NOTE: All recommendations as to use of parts and materials mentioned in this catalog assume that the buyer will ascertain their suitability and that all safety and health standards are met.*DuPont Registered Trademark

NOTE: WE CAN NO LONGER SHIP THIS PRODUCT OUTSIDE OF THE UNITED STATES.

PIPE SEALANT

PART NO	DESCRIPTION	QTY	PRICE EA
RS21	RectorSeal® No. 21™ (8 oz-24/case)	1 can	
RSTB	RectorSeal® Tru-Blu™ (8 oz-24/case)	1 can	
RSTB-2	RectorSeal® Tru-Blu™ w/TFE (2 oz)	1 tube	

Polypropylene Mini "T" Line Strainers

FEATURES

- Heavy-duty glass reinforced polypropylene.
- Clear or black polypropylene bowl.
- Polypropylene ribbed 316 stainless steel screens.
- EPDM gaskets standard.
- Clear Bowl Max 100 P.S.I. at 70°F.
  Black Bowl Max 150 P.S.I. at 70°F.
- Convenient color coded screens for easy mesh size identification. (Refer to chart below)

½" Mini T-Strainer with Clear Bowl

SCREENS	
MESH SIZE	RIB COLOR
30 MESH	YELLOW
50 MESH	RED
80 MESH	BLUE
100 MESH	GREEN

½" Mini T-Strainer with Black Bowl

½" MINI T-STRAINER W/CLEAR BOWL			
PART NO	DESCRIPTION	QTY	PRICE EA
LSTM050-30C	½" x ½" Clear Bowl Strainer w/30 Mesh Screen	1	
LSTM050-50C	½" x ½" Clear Bowl Strainer w/50 Mesh Screen	1	
LSTM050-80C	½" x ½" Clear Bowl Strainer w/80 Mesh Screen	1	
LSTM050-100C	½" x ½" Clear Bowl Strainer w/100 Mesh Screen	1	

½" MINI T-STRAINER W/BLACK BOWL			
PART NO	DESCRIPTION	QTY	PRICE EA
LSTM050-30	½" x ½" Black Bowl Strainer w/30 Mesh Screen	1	
LSTM050-50	½" x ½" Black Bowl Strainer w/50 Mesh Screen	1	
LSTM050-80	½" x ½" Black Bowl Strainer w/80 Mesh Screen	1	
LSTM050-100	½" x ½" Black Bowl Strainer w/100 Mesh Screen	1	

¾" MINI T-STRAINER W/CLEAR BOWL			
PART NO	DESCRIPTION	QTY	PRICE EA
LSTM075-30C	¾" x ¾" Clear Bowl Strainer w/30 Mesh Screen	1	
LSTM075-50C	¾" x ¾" Clear Bowl Strainer w/50 Mesh Screen	1	
LSTM075-80C	¾" x ¾" Clear Bowl Strainer w/80 Mesh Screen	1	
LSTM075-100C	¾" x ¾" Clear Bowl Strainer w/100 Mesh Screen	1	

¾" MINI T-STRAINER W/BLACK BOWL			
PART NO	DESCRIPTION	QTY	PRICE EA
LSTM075-30	¾" x ¾" Black Bowl Strainer w/30 Mesh Screen	1	
LSTM075-50	¾" x ¾" Black Bowl Strainer w/50 Mesh Screen	1	
LSTM075-80	¾" x ¾" Black Bowl Strainer w/80 Mesh Screen	1	
LSTM075-100	¾" x ¾" Black Bowl Strainer w/100 Mesh Screen	1	

STANDARD MESHES & DATA (FOR GENERAL USE ONLY)				
MESH	MICRONS	WIRE DIAMETER	OPENING	% OPEN AREA
30 Mesh	595	.012	.021	40.8
50 Mesh	297	.009	.011	30.3
80 Mesh	177	.0055	.007	31.4
100 Mesh	149	.0045	.005	30.3

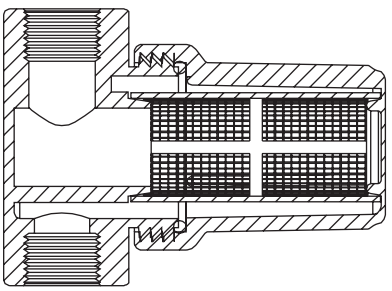

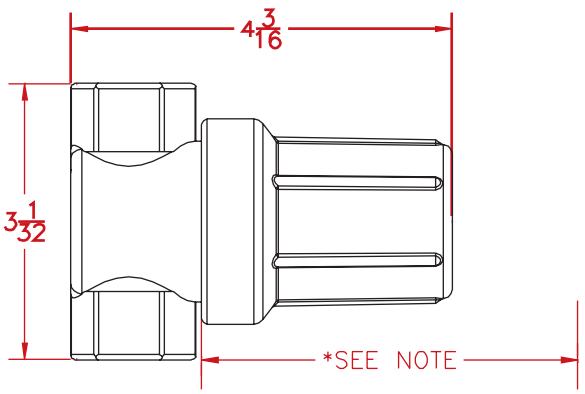

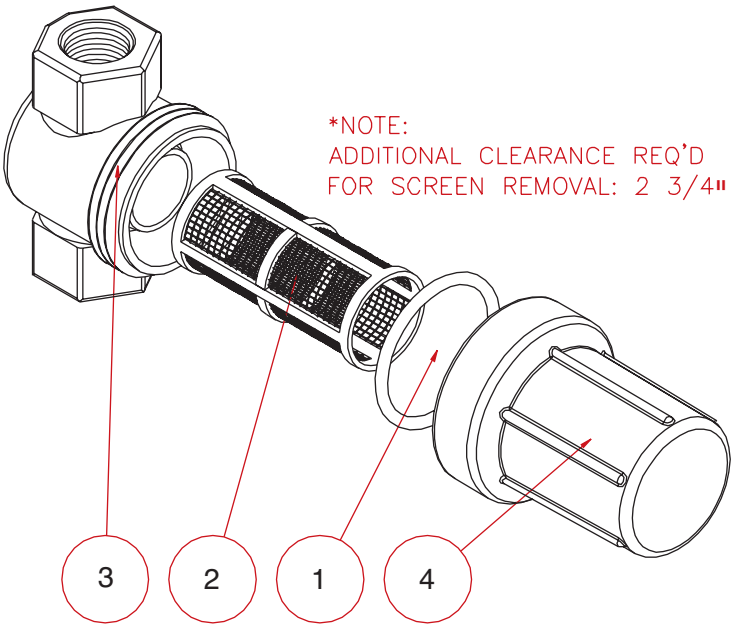

REPLACEMENT PARTS LSTM050-C & LSTM075-C				
ITEM	PART NO	DESCRIPTION	QTY	PRICE EA
1	LSTM050G	EPDM Gasket	1	
1	UV10264V	FKM (viton type) O-Ring	1	
2	LST530	30 Mesh Screen	1	
2	LST550	50 Mesh Screen	1	
2	LST580	80 Mesh Screen	1	
2	LST5100	100 Mesh Screen	1	
3	LST050H	½" Strainer Head	1	
3	LST075H2	¾" Strainer Head	1	
4	LST050BC	Clear Bowl	1	

REPLACEMENT PARTS LSTM050 & LSTM075				
ITEM	PART NO	DESCRIPTION	QTY	PRICE EA
1	LSTM050G	EPDM Gasket	1	
1	UV10264V	FKM (viton type) O-Ring	1	
2	LST530	30 Mesh Screen	1	
2	LST550	50 Mesh Screen	1	
2	LST580	80 Mesh Screen	1	
2	LST5100	100 Mesh Screen	1	
3	LST050H	½" Strainer Head	1	
3	LST075H2	¾" Strainer Head	1	
4	LST050B	Black Bowl	1	

Polypropylene "T" Line Strainers

FEATURES

- Heavy-duty glass reinforced polypropylene.
- Clean-out plug.
- 316 stainless steel reinforced screens.
- EPDM gaskets standard. FKM (viton type) available.
- 150 P.S.I. at 70°F.

¾" And 1"

SCREENS	
MESH SIZE	RIB COLOR
16 MESH	GRAY
30 MESH	YELLOW
50 MESH	RED
80 MESH	BLUE
100 MESH	GREEN

1¼" And 1½"

¾" T-STRAINER W/SS SCREENS			
PART NO	DESCRIPTION	QTY	PRICE EA
LST075-16	¾" x ¾" T Strainer w/16 Mesh SS Screen	1	
LST075-30	¾" x ¾" T Strainer w/30 Mesh SS Screen	1	
LST075-50	¾" x ¾" T Strainer w/50 Mesh SS Screen	1	
LST075-80	¾" x ¾" T Strainer w/80 Mesh SS Screen	1	
LST075-100	¾" x ¾" T Strainer w/100 Mesh SS Screen	1	

1¼" T-STRAINER W/SS SCREENS			
PART NO	DESCRIPTION	QTY	PRICE EA
LST125-16	1¼" x 1¼" T Strainer w/16 Mesh SS Screen	1	
LST125-30	1¼" x 1¼" T Strainer w/30 Mesh SS Screen	1	
LST125-50	1¼" x 1¼" T Strainer w/50 Mesh SS Screen	1	
LST125-80	1¼" x 1¼" T Strainer w/80 Mesh SS Screen	1	
LST125-100	1¼" x 1¼" T Strainer w/100 Mesh SS Screen	1	

1" T-STRAINER W/SS SCREENS			
PART NO	DESCRIPTION	QTY	PRICE EA
LST100-16	1" x 1" T Strainer w/16 Mesh SS Screen	1	
LST100-30	1" x 1" T Strainer w/30 Mesh SS Screen	1	
LST100-50	1" x 1" T Strainer w/50 Mesh SS Screen	1	
LST100-80	1" x 1" T Strainer w/80 Mesh SS Screen	1	
LST100-100	1" x 1" T Strainer w/100 Mesh SS Screen	1	

1½" T-STRAINER W/SS SCREENS			
PART NO	DESCRIPTION	QTY	PRICE EA
LST150-16	1½" x 1½" T Strainer w/16 Mesh SS Screen	1	
LST150-30	1½" x 1½" T Strainer w/30 Mesh SS Screen	1	
LST150-50	1½" x 1½" T Strainer w/50 Mesh SS Screen	1	
LST150-80	1½" x 1½" T Strainer w/80 Mesh SS Screen	1	
LST150-100	1½" x 1½" T Strainer w/100 Mesh SS Screen	1	

LVHB038050MTV

LV050100MTV

POLY MICRO VALVES						
PART NO	DESCRIPTION	MAX PSI	PIPE SIZE	OPENING THRU BALL	QTY	PRICE EA
LV038050MTV	⅜" Female x ½" Male NPT Micro Valve for ½" Drain Plug	300	⅜"x½"	⅜"	1	
LVHB038050MTV	⅜" Hose Barb x ½" Male NPT Micro Valve for ½"Drain Plug	300	½"	⅜"	1	
LV050100MTV	½" Female x 1" Male NPT Micro Valve for 1" Drain Plug	300	½"x1"	15/32"	1	
LVHB075100MTV	¾" Hose Barbx 1" Male NPT Micro Valve for 1" Drain Plug	300	1"	15/32"	1	

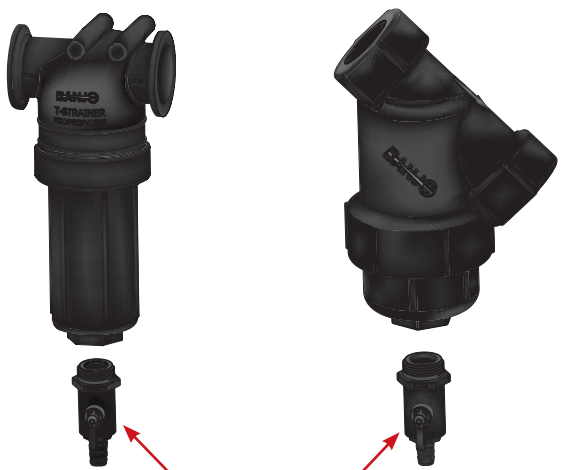

Add poly micro valve for easy clean out!

REPLACEMENT PARTS LST075 & LST100				
ITEM	PART NO	DESCRIPTION	QTY	PRICE EA
1	LST100-B*	¾" & 1" Bowl	1	
2	LST100-G	¾" & 1" EPDM Gasket	1	
2	LST100-GV	¾" & 1" FKM (viton type) Gasket	1	
3	12777	½" Plug	1	
4	UV15163	EPDM O-Ring for Clean Out Plug	1	
4	UV15163V	FKM (viton type) O-Ring for Clean Out Plug	1	
5	LST116	16 Mesh Screen	1	
5	LST130	30 Mesh Screen	1	
5	LST150	50 Mesh Screen	1	
5	LST180	80 Mesh Screen	1	
5	LST1100	100 Mesh Screen	1	
6	LST075-H	¾" Strainer Head	1	
6	LST100-H	1" Strainer Head	1	
7	13778	O-Ring	1	
N/S	LST075-HB	¾" Strainer Head, Bowl & Gasket	1	
N/S	LST100-HB	1" Strainer Head, Bowl & Gasket	1	

NOTE: Items marked with asterisk* include parts 1, 3 and 4.

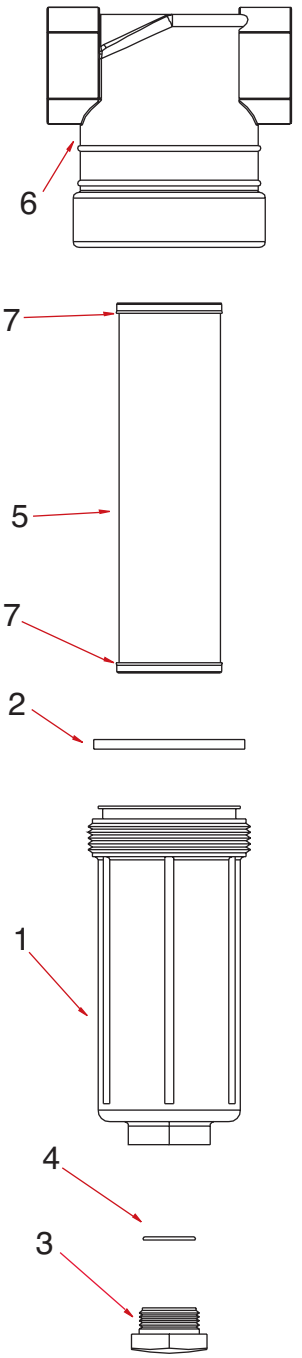

REPLACEMENT PARTS LST125 & LST150				
ITEM	PART NO	DESCRIPTION	QTY	PRICE EA
1	LST150-B*	1¼" & 1½" Bowl	1	
2	LST150-G	1¼" & 1½" EPDM Gasket	1	
2	LST150-GV	1¼" & 1½" FKM (viton type) Gasket	1	
3	LSQ200-PL	1" Clean Out Plug	1	
4	LSQ200-R	EPDM O-Ring for Clean Out Plug	1	
4	LSQ200-RV	FKM (viton type) O-Ring for Clean Out Plug	1	
5	LST1516	16 Mesh Screen	1	
5	LST1530	30 Mesh Screen	1	
5	LST1550	50 Mesh Screen	1	
5	LST1580	80 Mesh Screen	1	
5	LST15100	100 Mesh Screen	1	
6	LST125-H	1¼" Strainer Head	1	
6	LST150-H	1½" Strainer Head	1	
7	LST034G	EPDM O-Ring for Screen	1	
N/S	LST125-HB	1¼" Strainer Head, Bowl & Gasket	1	
N/S	LST150-HB	1½" Strainer Head, Bowl & Gasket	1	

NOTE: Items marked with asterisk* include parts 1, 3 and 4.

STANDARD MESHES & DATA (FOR GENERAL USE ONLY)				
MESH	MICRONS	WIRE DIAMETER	OPENING	% OPEN AREA
16 Mesh	1190	.018	.044	50.7
30 Mesh	595	.012	.021	40.8
50 Mesh	297	.009	.011	30.3
80 Mesh	177	.0055	.007	31.4
100 Mesh	149	.0045	.005	30.3

2" "T" Line Strainer — Poly/Stainless Combo

FEATURES

- 316 stainless steel head.
- Glass reinforced polypropylene bowl.
- Clean-out plug.
- 316 stainless steel reinforced screens.
- FKM (viton type) gaskets.
- 150 P.S.I. at 70°F.

2" POLY/SS T-STRAINER W/ SCREENS			
PART NO	DESCRIPTION	QTY	PRICE EA
LST200-04SS	2" x 2" T Strainer (SS Head & Poly Body) w/4MeshScreen	1	
LST200-06SS	2" x 2" T Strainer (SS Head & Poly Body) w/6MeshScreen	1	
LST200-10SS	2" x 2" T Strainer (SS Head & Poly Body) w/10 Mesh Screen	1	
LST200-16SS	2" x 2" T Strainer (SS Head & Poly Body) w/16 Mesh Screen	1	
LST200-30SS	2" x 2" T Strainer (SS Head & Poly Body) w/30 Mesh Screen	1	
LST200-50SS	2" x 2" T Strainer (SS Head & Poly Body) w/50 Mesh Screen	1	
LST200-80SS	2" x 2" T Strainer (SS Head & Poly Body) w/80 Mesh Screen	1	
LST200-100SS	2" x 2" T Strainer (SS Head & Poly Body) w/100 Mesh Screen	1	

POLY MICRO VALVES						
PART NO	DESCRIPTION	MAX PSI	PIPE SIZE	OPENING THRU BALL	QTY	PRICE EA
LV038050MTV	3/8" Female x 1/2" Male NPT Micro Valve for 1/2" Drain Plug	300	3/8"x1/2"	3/8"	1	
LVHB038050MTV	3/8" Hose Barb x 1/2" Male NPT Micro Valve for 1/2"Drain Plug	300	1/2"	3/8"	1	
LV050100MTV	1/2" Female x 1" Male NPT Micro Valve for 1" Drain Plug	300	1/2"x1"	15/32"	1	
LVHB075100MTV	3/4" Hose Barbx 1" Male NPT Micro Valve for 1" Drain Plug	300	1"	15/32"	1	

Add poly micro valve for easy clean out!

LSQ Polypropylene Line Strainers

FEATURES

- Precision molded in glass reinforced polypropylene.
- Cam lever configuration for easy access for cleaning and servicing.
- 3/4" plug in cam lever cap for attaching ball valve for draining or back flushing.
- Poly ribbed 316 stainless steel screen.
- EPDM lathe cut gasket.
- FKM (viton type) gaskets available.
- 75 P.S.I. maximum.

SCREENS	
MESH SIZE	RIB COLOR
6 MESH	WHITE
12 MESH	BLACK
20 MESH	BEIGE
30 MESH	YELLOW
50 MESH	RED
80 MESH	BLUE
120 MESH	BLACK

For *faster* shipping, order in box quantities.

1½" LSQ POLY STRAINERS			
PART NO	DESCRIPTION	QTY	PRICE EA
LSQ150-06	1½" x 1½" LSQ Strainer w/6 Mesh Screen	6/Box	
LSQ150-12	1½" x 1½" LSQ Strainer w/12 Mesh Screen	6/Box	
LSQ150-20	1½" x 1½" LSQ Strainer w/20 Mesh Screen	6/Box	
LSQ150-30	1½" x 1½" LSQ Strainer w/30 Mesh Screen	6/Box	
LSQ150-50	1½" x 1½" LSQ Strainer w/50 Mesh Screen	6/Box	
LSQ150-80	1½" x 1½" LSQ Strainer w/80 Mesh Screen	6/Box	
LSQ150-120	1½" x 1½" LSQ Strainer w/120 Mesh Screen	6/Box	

2" LSQ POLY STRAINERS			
PART NO	DESCRIPTION	QTY	PRICE EA
LSQ200-06	2" x 2" LSQ Strainer w/6 Mesh Screen	6/Box	
LSQ200-12	2" x 2" LSQ Strainer w/12 Mesh Screen	6/Box	
LSQ200-20	2" x 2" LSQ Strainer w/20 Mesh Screen	6/Box	
LSQ200-30	2" x 2" LSQ Strainer w/30 Mesh Screen	6/Box	
LSQ200-50	2" x 2" LSQ Strainer w/50 Mesh Screen	6/Box	
LSQ200-80	2" x 2" LSQ Strainer w/80 Mesh Screen	6/Box	
LSQ200-120	2" x 2" LSQ Strainer w/120 Mesh Screen	6/Box	

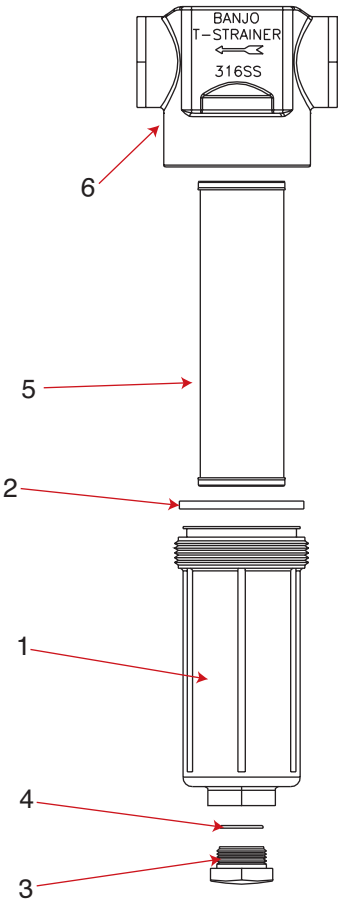

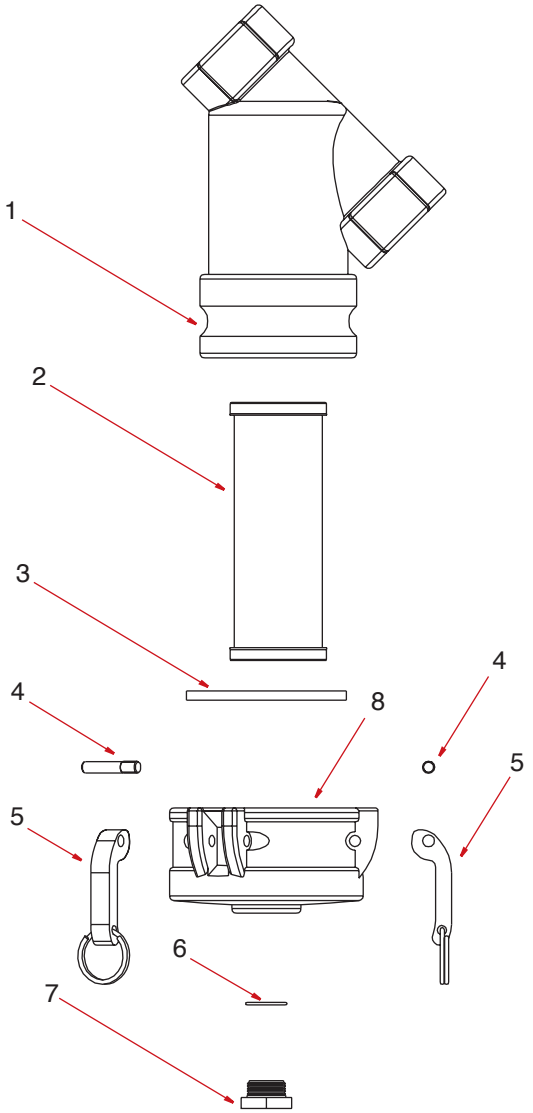

REPLACEMENT PARTS LST200				
ITEM	PART NO	DESCRIPTION	QTY	PRICE EA
1	LST200-B*	2" Poly Bowl	1	
2	LST200-GV	2" FKM (viton type) Gasket	1	
3	LSQ200-PL	1" Clean Out Plug	1	
4	LSQ200-RV	FKM (viton type) O-Ring for Clean Out Plug	1	
5	LST204SS	4 Mesh SS Screen	1	
5	LST206SS	6 Mesh SS Screen	1	
5	LST208SS	8 Mesh SS Screen	1	
5	LST210SS	10 Mesh SS Screen	1	
5	LST216SS	16 Mesh SS Screen	1	
5	LST230SS	30 Mesh SS Screen	1	
5	LST250SS	50 Mesh SS Screen	1	
5	LST280SS	80 Mesh SS Screen	1	
5	LST2100SS	100 Mesh SS Screen	1	
6	LST200-HSS	2" SS Head	1	
N/S	LST200-HBSS	2" SS Head, Poly Bowl & Gasket	1	

NOTE: Items marked with asterisk* include parts 1, 3 and 4.

STANDARD MESHES & DATA (FOR GENERAL USE ONLY)				
MESH	MICRONS	WIRE DIAMETER	OPENING	% OPEN AREA
6 Mesh	3360	.035	.132	62.7
8 Mesh	2380	.028	.097	60.2
10 Mesh	2000	.025	.075	56.3
12 Mesh	1680	.023	.060	51.8
16 Mesh	1190	.018	.044	50.7
20 Mesh	841	.016	.034	46.2
30 Mesh	595	.012	.021	40.8
50 Mesh	297	.009	.011	30.3
80 Mesh	177	.0055	.007	31.4
100 Mesh	149	.0045	.005	30.3
120 Mesh	125	.0037	.0046	30.5

REPLACEMENT PARTS LSQ150 & LSQ200				
ITEM	PART NO	DESCRIPTION	QTY	PRICE EA
1	LSQ150-B	1½" LSQ Body	1	
1	LSQ200-B	2" LSQ Body	1	
2	LS206	6 Mesh Screen	1	
2	LS212	12 Mesh Screen	1	
2	LS220	20 Mesh Screen	1	
2	LS230	30 Mesh Screen	1	
2	LS250	50 Mesh Screen	1	
2	LS280	80 Mesh Screen	1	
2	LS2120	120 Mesh Screen	1	
2	LS2150	150 Mesh Screen	1	
3	LSQ200-G	2" EPDM Gasket	1	
3	LSQ200-GV	2" FKM (viton type) Gasket	1	
4	300P	SS Cam Pin	1	
5	300K	3" SS Cam Arm w/Ring	1	
6	LSQ200R1	EPDM for Clean Out Plug	1	
6	13778V	O-Ring	1	
7	PLUG075S	¾" Clean Out Plug	1	
8	LSQ200-C*	2" Cap	1	

NOTE: Items marked with asterisk* include parts 3, 4, 5, 6 and 7.

½"-1¼" Polypropylene "Y" Strainers

FEATURES

- Precision molded construction.
- Corrosion resistant.
- Lightweight.
- Fiberglass reinforced.
- Easy grip end cap.
- Poly ribbed 304 stainless steel screen.
- EPDM gaskets FKM (viton type) available.
- Heavy duty end cap threads.
- 150 P.S.I. Maximum.
- Clean-out plug.
- Female NPT x Female NPT.

½" Y-STRAINER W/POLY RIBBED SS SCREENS			
PART NO	DESCRIPTION	QTY	PRICE EA
LS050-20	½" x ½" Y Strainer w/20 Mesh SS Screen	1	
LS050-40	½" x ½" Y Strainer w/40 Mesh SS Screen	1	
LS050-60	½" x ½" Y Strainer w/60 Mesh SS Screen	1	
LS050-80	½" x ½" Y Strainer w/80 Mesh SS Screen	1	

1" Y-STRAINER W/ POLY RIBBED SS SCREENS			
PART NO	DESCRIPTION	QTY	PRICE EA
LS100-20	1" x 1" Y Strainer w/20 Mesh SS Screen	1	
LS100-40	1" x 1" Y Strainer w/40 Mesh SS Screen	1	
LS100-80	1" x 1" Y Strainer w/80 Mesh SS Screen	1	

¾" Y-STRAINER W/ POLY RIBBED SS SCREENS			
PART NO	DESCRIPTION	QTY	PRICE EA
LS075-20	¾" x ¾" Y Strainer w/20 Mesh SS Screen	1	
LS075-40	¾" x ¾" Y Strainer w/40 Mesh SS Screen	1	
LS075-60	¾" x ¾" Y Strainer w/60 Mesh SS Screen	1	
LS075-80	¾" x ¾" Y Strainer w/80 Mesh SS Screen	1	

1¼" Y-STRAINER W/ POLY RIBBED SS SCREENS			
PART NO	DESCRIPTION	QTY	PRICE EA
LS125-20	1¼" x 1¼" Y Strainer w/20 Mesh SS Screen	1	
LS125-40	1¼" x 1¼" Y Strainer w/40 Mesh SS Screen	1	
LS125-80	1¼" x 1¼" Y Strainer w/80 Mesh SS Screen	1	

POLY MICRO VALVES						
PART NO	DESCRIPTION	MAX PSI	PIPE SIZE	OPENING THRU BALL	QTY	PRICE EA
LV038050MTV	⅜" Female x ½" Male NPT Micro Valve for ½" Drain Plug	300	⅜"x½"	⅜"	1	
LVHB038050MTV	⅜" Hose Barb x ½" Male NPT Micro Valve for ½"Drain Plug	300	½"	⅜"	1	
LV050100MTV	½" Female x 1" Male NPT Micro Valve for 1" Drain Plug	300	½"x1"	15/32"	1	
LVHB075100MTV	¾" Hose Barbx 1" Male NPT Micro Valve for 1" Drain Plug	300	1"	15/32"	1	

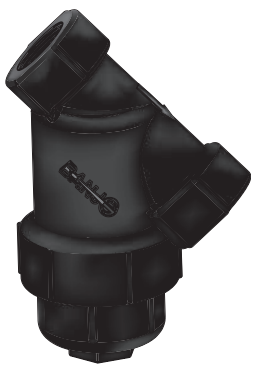

Add poly micro valve for easy clean out!

REPLACEMENT PARTS ½"-¾" Y STRAINERS				
ITEM	PART NO	DESCRIPTION	QTY	PRICE EA
1	LS075-C1*	½"-¾" End Cap	1	
2	LS075-G	½"-¾" O-Ring	1	
2	LS075-GV	½"-¾" FKM (viton type) Gasket	1	
3	12723	¼" Drain Plug (Fits ½"-¾")	1	
4	12724	½"-¾" EPDM O-Ring for Drain Plug	1	
5	LS720	½"-¾" 20 Mesh Screen	1	
5	LS740	½"-¾" 40 Mesh Screen	1	
5	LS760	½"-¾" 60 Mesh Screen	1	
5	LS780	½"-¾" 80 Mesh Screen	1	
6	LS050-B	½" Y Body	1	
6	LS075-B	¾" Y Body	1	
N/S	LS050B/C1	½" Y Body, Cap & Gasket	1	
N/S	LS075B/C1	¾" Y Body, Cap & Gasket	1	

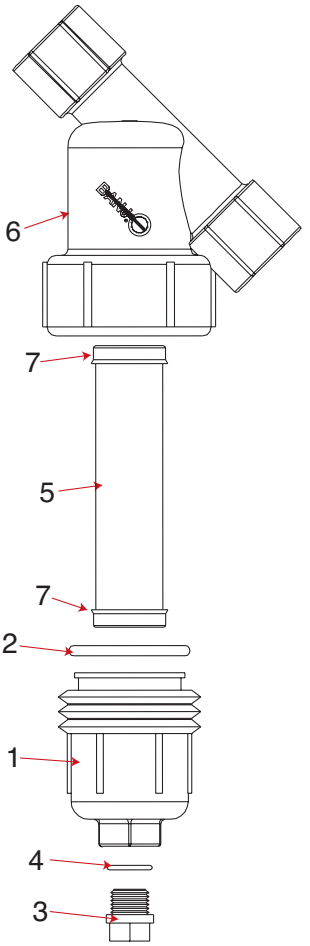

REPLACEMENT PARTS 1"-1¼" Y STRAINERS				
ITEM	PART NO	DESCRIPTION	QTY	PRICE EA
1	LS100-C1*	1"-1¼" End Cap	1	
2	LS100-G	1"-1¼" O-Ring	1	
2	LS100-GV	1"-1¼" FKM (viton type) Gasket	1	
3	12777	½" Plug (Fits 1"-1¼")	1	
4	UV15163	1"-1¼" EPDM O-Ring for Drain Plug	1	
4	UV15163V	1"-1¼" FKM (viton type) O-Ring for Drain Plug	1	
5	LS120	1"-1¼" 20 Mesh Screen	1	
5	LS140	1"-1¼" 40 Mesh Screen	1	
5	LS180	1"-1¼" 80 Mesh Screen	1	
6	LS100-B	1" Y Body	1	
6	LS125-B	1¼" Y Body	1	
7	LS125G	1"-1¼" EPDM O-Ring	1	
N/S	LS100B/C1	1" Y Body, Cap & Gasket	1	
N/S	LS125B/C1	1¼" Y Body, Cap & Gasket	1	

NOTE: Items marked with asterisk* come with parts 1, 3, and 4.

SCREENS	
MESH SIZE	RIB COLOR
6 MESH	WHITE
12 MESH	BLACK
20 MESH	BEIGE
30 MESH	YELLOW
40 MESH	BROWN
50 MESH	RED
60 MESH	ORANGE
80 MESH	BLUE
100 MESH	GREEN
120 MESH	BLACK

STANDARD MESHES & DATA (FOR GENERAL USE ONLY)				
MESH	MICRONS	WIRE DIAMETER	OPENING	% OPEN AREA
6 Mesh	3360	.035	.132	62.7
8 Mesh	2380	.028	.097	60.2
12 Mesh	1680	.023	.060	51.8
16 Mesh	1190	.018	.044	50.7
20 Mesh	841	.016	.034	46.2
30 Mesh	595	.012	.021	40.8
40 Mesh	400	.010	.015	36.0
50 Mesh	297	.009	.011	30.3
60 Mesh	250	.0075	.009	30.5
80 Mesh	177	.0055	.007	31.4
100 Mesh	149	.0045	.005	30.3
120 Mesh	125	.0037	.0046	30.5

1½"-2" Polypropylene "Y" Strainers

FEATURES

- Precision molded construction.
- Corrosion resistant.
- Lightweight.
- Fiberglass reinforced.
- Easy grip end cap.
- Poly ribbed 316 stainless steel screen.
- EPDM gaskets FKM (viton type) available.
- Heavy duty end cap threads.
- 1½"- 2" 150 P.S.I. Maximum.
- Clean-out plug.
- Female NPT x Female NPT.

1½" Y-STRAINER W/ALL POLY SCREENS			
PART NO	DESCRIPTION	QTY	PRICE EA
LS150-12P	1½" x 1½" Y Strainer w/12 Mesh All Poly Screen	1	
LS150-20P	1½" x 1½" Y Strainer w/20 Mesh All Poly Screen	1	
LS150-50P	1½" x 1½" Y Strainer w/50 Mesh All Poly Screen	1	

1½" Y-STRAINER W/POLY RIBBED SS SCREENS			
PART NO	DESCRIPTION	QTY	PRICE EA
LS150-06	1½" x 1½" Y Strainer w/6 Mesh SS Screen	1	
LS150-12	1½" x 1½" Y Strainer w/12 Mesh SS Screen	1	
LS150-20	1½" x 1½" Y Strainer w/20 Mesh SS Screen	1	
LS150-30	1½" x 1½" Y Strainer w/30 Mesh SS Screen	1	
LS150-50	1½" x 1½" Y Strainer w/50 Mesh SS Screen	1	
LS150-80	1½" x 1½" Y Strainer w/80 Mesh SS Screen	1	
LS150-120	1½" x 1½" Y Strainer w/120 Mesh SS Screen	1	

2" Y-STRAINER W/ALL POLY SCREENS			
PART NO	DESCRIPTION	QTY	PRICE EA
LS200-12P	2" x 2" Y Strainer w/12 Mesh All Poly Screen	1	
LS200-20P	2" x 2" Y Strainer w/20 Mesh All Poly Screen	1	
LS200-50P	2" x 2" Y Strainer w/50 Mesh All Poly Screen	1	

2" Y-STRAINER W/POLY RIBBED SS SCREENS			
PART NO	DESCRIPTION	QTY	PRICE EA
LS200-06	2" x 2" Y Strainer w/6 Mesh Poly Ribbed SS Screen	1	
LS200-12	2" x 2" Y Strainer w/12 Mesh Poly Ribbed SS Screen	1	
LS200-20	2" x 2" Y Strainer w/20 Mesh Poly Ribbed SS Screen	1	
LS200-30	2" x 2" Y Strainer w/30 Mesh Poly Ribbed SS Screen	1	
LS200-50	2" x 2" Y Strainer w/50 Mesh Poly Ribbed SS Screen	1	
LS200-80	2" x 2" Y Strainer w/80 Mesh Poly Ribbed SS Screen	1	
LS200-100	2" x 2" Y Strainer w/100 Mesh Poly Ribbed SS Screen	1	
LS200-120	2" x 2" Y Strainer w/120 Mesh Poly Ribbed SS Screen	1	

POLY MICRO VALVES						
PART NO	DESCRIPTION	MAX PSI	PIPE SIZE	OPENING THRU BALL	QTY	PRICE EA
LV038050MTV	⅜" Female x ½" Male NPT Micro Valve for ½" Drain Plug	300	⅜"x½"	⅜"	1	
LVHB038050MTV	⅜" Hose Barb x ½" Male NPT Micro Valve for ½"Drain Plug	300	½"	⅜"	1	
LV050100MTV	½" Female x 1" Male NPT Micro Valve for 1" Drain Plug	300	½"x1"	15/32"	1	
LVHB075100MTV	¾" Hose Barbx 1" Male NPT Micro Valve for 1" Drain Plug	300	1"	15/32"	1	

Add poly micro valve for easy clean out!

REPLACEMENT PARTS 1½"-2" Y STRAINERS				
ITEM	PART NO	DESCRIPTION	QTY	PRICE EA
1	LS150-C*	1½" - 2" End Cap	1	
2	LS150-G	1½"-2" O-Ring	1	
2	LS150-GV	1½"-2" FKM (viton type) Gasket	1	
3	LSQ200-PL	1" Drain Plug (Fits 1½" - 2")	1	
4	LSQ200-R	1½"-2" EPDM O-Ring for Drain Plug	1	
4	LSQ200-RV	1½"-2" FKM (viton type) O-Ring for Drain Plug	1	
5	LS206	1½"-2" 6 Mesh Screen	1	
5	LS212	1½"-2" 12 Mesh Screen	1	
5	LS220	1½"-2" 20 Mesh Screen	1	
5	LS230	1½"-2" 30 Mesh Screen	1	
5	LS250	1½"-2" 50 Mesh Screen	1	
5	LS280	1½"-2" 80 Mesh Screen	1	
5	LS2100	1½"-2" 100 Mesh Screen	1	
5	LS2120	1½"-2" 120 Mesh Screen	1	
5	LS2150	1½"-2" 150 Mesh Screen	1	
5	LS212P	1½"-2" 12 Mesh All Poly Screen	1	
5	LS220P	1½"-2" 20 Mesh All Poly Screen	1	
5	LS250P	1½"-2" 50 Mesh All Poly Screen	1	
6	LS150-B	1½" Y Body	1	
6	LS200-B	2" Y Body	1	
7	LS141G	1½"-2" EPDM O-Ring	1	
N/S	LS150B/C	1½" Y Body, Cap & Gasket	1	
N/S	LS200B/C	2" Y Body, Cap & Gasket	1	

NOTE: Items marked with asterisk* come with parts 1, 3, and 4.

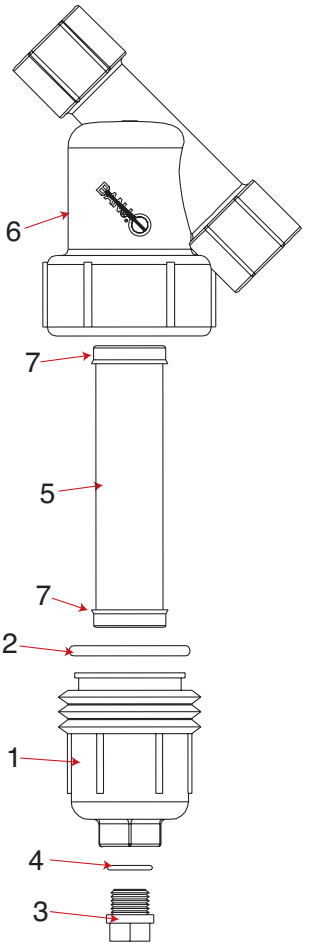

SCREENS	
MESH SIZE	RIB COLOR
6 MESH	WHITE
12 MESH	BLACK
20 MESH	BEIGE
30 MESH	YELLOW
40 MESH	BROWN
50 MESH	RED
80 MESH	BLUE
100 MESH	GREEN
120 MESH	BLACK

STANDARD MESHES & DATA (FOR GENERAL USE ONLY)				
MESH	MICRONS	WIRE DIAMETER	OPENING	% OPEN AREA
6 Mesh	3360	.035	.132	62.7
8 Mesh	2380	.028	.097	60.2
12 Mesh	1680	.023	.060	51.8
16 Mesh	1190	.018	.044	50.7
20 Mesh	841	.016	.034	46.2
30 Mesh	595	.012	.021	40.8
40 Mesh	400	.010	.015	36.0
50 Mesh	297	.009	.011	30.3
60 Mesh	250	.0075	.009	30.5
80 Mesh	177	.0055	.007	31.4
100 Mesh	149	.0045	.005	30.3
120 Mesh	125	.0037	.0046	30.5

3" "Y" Strainers

See page 136 for poly micro valve clean out!

FEATURES

- Lightweight.
- High volume.
- Constructed of glass reinforced polypropylene.
- ½" drain plug in bottom of cap.
- Reinforced 304 stainless steel screen.
- 3" female NPT threads.
- 75 P.S.I. maximum.*

FEATURES

- EPDM gaskets standard FKM (viton type) available.
- Corrosion resistant.
- 200 P.S.I. maximum.
- Clean-out plug.
- 316 Stainless steel screens sold separately.

3" Female NPT threads!

3" Y-STRAINERS			
PART NO	DESCRIPTION	QTY	PRICE EA
LSM300-04	3" x 3" Y Strainer w/4 Mesh Screen	2/Box	
LSM300-08	3" x 3" Y Strainer w/8 Mesh Screen	2/Box	
LSM300-12	3" x 3" Y Strainer w/12 Mesh Screen	2/Box	
LSM300-20	3" x 3" Y Strainer w/20 Mesh Screen	2/Box	
LSM300-50	3" x 3" Y Strainer w/50 Mesh Screen	2/Box	

*WARNING: 3" Polypropylene "Y" Strainer to be used on suction side or non-pressure side in all applications.

3" SS Y-STRAINERS			
PART NO	DESCRIPTION	QTY	PRICE EA
LSS300-BC	3" SS Body, Cap & Gaskets	1	
LSS300-B	3" SS Body	1	
LSS300-C	3" SS Cap	1	
LSS300-S	EPDM Screen Seal	2	
LSS300-SV	FKM (viton type) Screen Seal	2	
LSS300-G	EPDM Cap Gasket	1	
LSS300-GV	FKM (viton type) Cap Gasket	1	
LSS300-H	Handle/Clamp Assembly	1	

NOTE: Screens Sold Separately. See chart below.

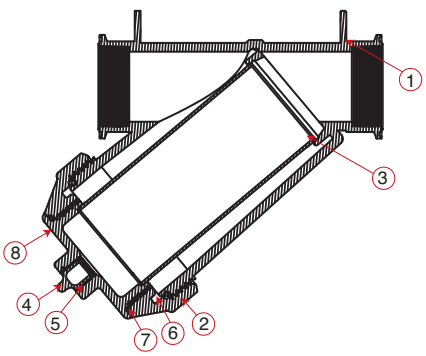

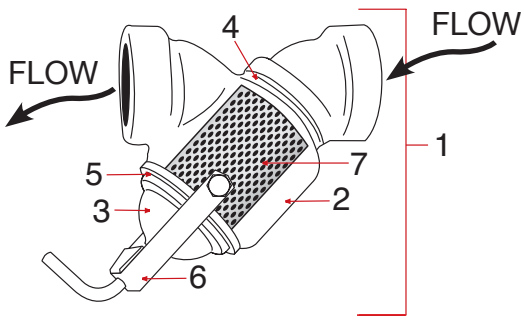

REPLACEMENT PARTS LSM300				
ITEM	PART NO	DESCRIPTION	QTY	PRICE EA
1	MLS300B1	3" Poly Body	1	
2	MLS300CAP	3" Cap	1	
3	LS304	4 Mesh Screen	1	
3	LS308	8 Mesh Screen	1	
3	LS312	12 Mesh Screen	1	
3	LS320	20 Mesh Screen	1	
3	LS350	50 Mesh Screen	1	
4	13777	¾" Plug	1	
5	13778	O-Ring	1	
6	MLS300G	EPDM Cap Gasket	1	
6	MLS300GV	FKM (viton type) Cap Gasket	1	
7	MLS300ECG	EPDM End Cap Gasket	1	
7	MLS300ECGV	FKM (viton type) Cap Gasket	1	
8	LS300EC	End Cap Only (Plug Sold Separately)	1	

REPLACEMENT PARTS LSS300				
ITEM	PART NO	DESCRIPTION	QTY	PRICE EA
1	LSS300-BC	3" SS Body, Cap & Gaskets	1	
2	LSS300-B	3" SS Body	1	
3	LSS300-C	3" SS Cap	1	
4	LSS300-S	EPDM Screen Seal	2	
4	LSS300-SV	FKM (viton type) Screen Seal	2	
5	LSS300-G	EPDM Cap Gasket	1	
5	LSS300-GV	FKM (viton type) Cap Gasket	1	
6	LSS300-H	Handle/Clamp Assembly	1	
7	LSS306	6 Mesh SS Screen	1	
7	LSS308	8 Mesh SS Screen	1	
7	LSS312	12 Mesh SS Screen	1	
7	LSS320	20 Mesh SS Screen	1	
7	LSS330	30 Mesh SS Screen	1	
7	LSS350	50 Mesh SS Screen	1	

Self-Priming Centrifugal Pumps

1½" & 2" Poly Pumps: Pages 140-153
Includes:
Gas Engine Pumps
Pump Only/Bearing Pedestal
Wet Seal w/gas engines
Manifold
Electric Motor Driven
Hydraulic Motor Driven

3" Cast Iron 333 Series Pumps: Pages 184-185
Includes:
Gas Engine Pumps
Pump Only/Bearing Pedestal
Electric Motor Driven

3" Poly Pumps: Pages 154-159
Includes:
Gas Engine Pumps
Pump Only/Bearing Pedestal
Wet Seal w/gas engines
Hydraulic Motor Driven
Manifold

3" CI Manifold Wet Seal M332 Series Pumps: Pages 186-189
Includes:
Gas Engine Pumps
Pump Only/Bearing Pedestal
Electric Motor Driven
Hydraulic Motor Driven

1½"-2" Cast Iron Pumps: Pages 160-169
Includes:
Gas Engine Pumps
Pump Only/Bearing Pedestal
Wet Seal
Electric Motor Driven
Hydraulic Motor Driven

4" Cast Iron 444 Series Pumps: Pages 190-191
Includes:
Gas Engine Pumps
Pump Only/Bearing Pedestal Pumps

2" Cast Iron 222 Series Pumps: Pages 170-177
Includes:
Gas Engine Pumps
Pump Only
Bearing Pedestal Pumps
Hydraulic Motor Driven
Manifold

2" & 3" SS Pumps: Pages 192-201
Includes:
Gas Engine Pumps
Pump Only/Bearing Pedestal.
Electric Motor Driven
Hydraulic Motor Driven

3" Cast Iron Pumps: Pages 178-183
Includes:
Gas Engine Pumps
Pump Only/Bearing Pedestal
Wet Seal
Hydraulic Motor Driven

For Engine Warranty Service Contact:

Briggs and Stratton: (414) 259-5262 or www.briggsandstratton.com

Honda: (800) 426-7701 or www.honda.com

NOTE: Prices listed are suggested retail price only. Please contact your local distributor for pricing.

NOTE: INV = INVENTORY
STK = STOCK MTO = MADE TO ORDER

1½" Polypropylene Pumps w/Gas Engines

PUMP FEATURES

- Precision molded construction.
- Lightweight.
- Corrosion resistant.
- Superior design.
- Low maintenance.
- EPDM Standard, FKM (viton type) available.

CAUTION-WARNING: Please do not run pump dry, restrict or reduce port sizes, or dead head pump. This could cause component failure to pump.

DO NOT USE WITH FLAMMABLE LIQUIDS.

NOTE: Engine warranty service available at authorized Briggs & Stratton and Honda dealers.

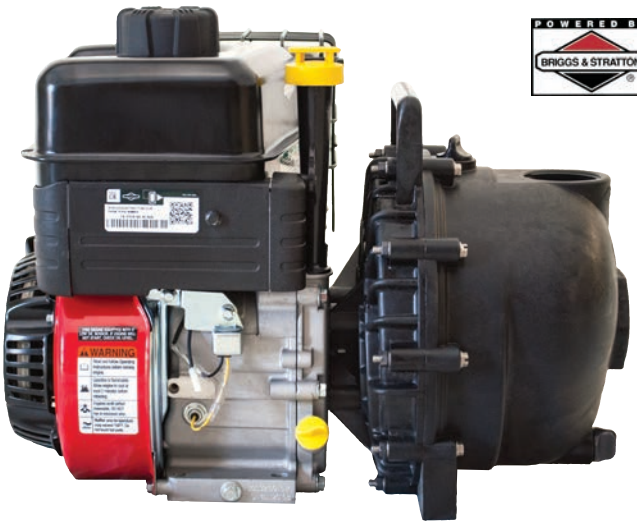

1½" POLY BEARING PEDESTAL					
PART NO	DESCRIPTION	HP	QTY	INV	PRICE EA
150PB	1½" Poly Bearing Pedestal w/ ¾" Shaft & 3 Vane Impeller	N/A	1	MTO	
150PB-V	1½" Poly Bearing Pedestal w/ ¾" Shaft & 3 Vane Impeller w/FKM (viton type) & 316 SS Seal	N/A	1	MTO	

*Requires ¾" shaft on motor.

1½" POLY PUMP ONLY					
PART NO	DESCRIPTION	HP	QTY	INV	PRICE EA
150PO	1½" Poly Pump Only* w/ 3 Vane Impeller	N/A	1	MTO	
150PO-V	1½" Poly Pump Only* w/ 3 Vane Impeller w/FKM (viton type) & 316 SS Seal	N/A	1	MTO	

*Requires ¾" shaft on motor.

1½" POLY PUMP W/GAS ENGINE					
PART NO	DESCRIPTION	HP	QTY	INV	PRICE EA
150P-3	1½" Poly Pump w/3.5 HP Briggs & Stratton® Engine	3.5	1	STK	
150P-3-V	1½" Poly Pump w/3.5 HP Briggs & Stratton® Engine w/FKM (viton type) & 316 SS Seal	3.5	1	MTO	

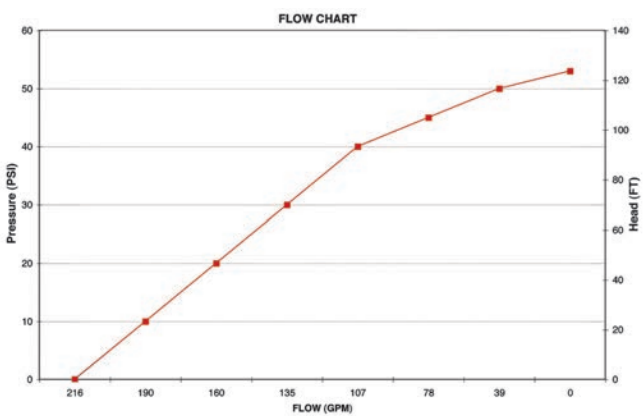

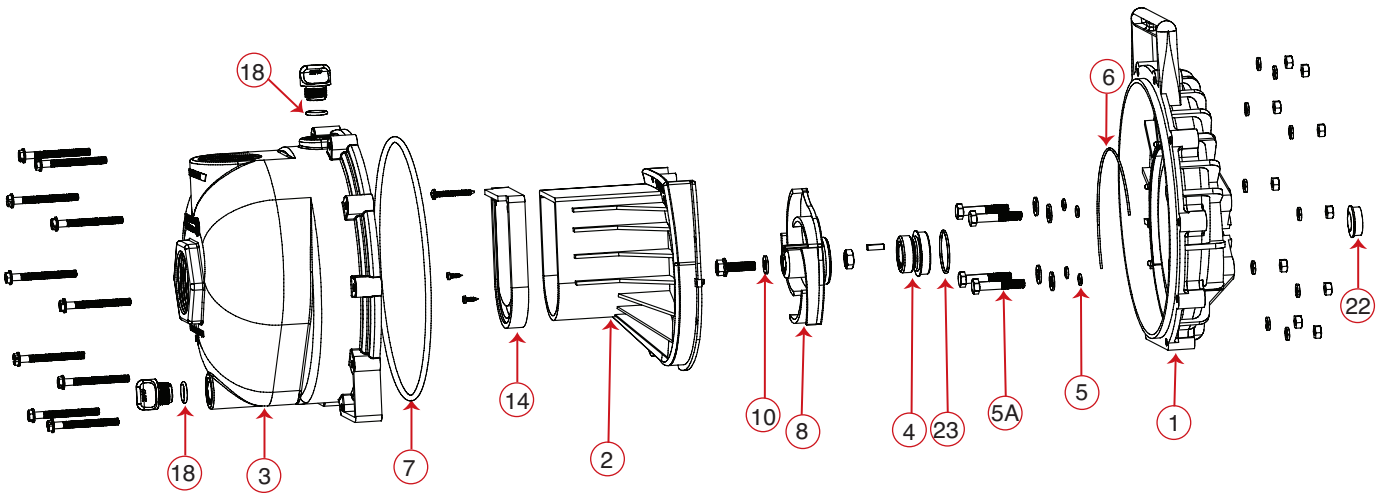

REPLACEMENT PARTS 1½" POLY PUMPS			
ITEM NO	PART NO	DESCRIPTION	PRICE EA
1	12703A	Rear Bracket	
2	12702A	Volute	
3	12711A	Body Assembly	
N/S	12099	7/16"-14 x 1.25" HHCS	
	12003A	3 Vane Impeller Repair Kit (Items 4-8, 10, 14, 18, 22, 23 & 12099)	
	12003AV	FKM(viton type) Impeller Repair Kit (Items 4-8, 10, 14, 18, 22, 23 & 12099)	
	12999A	Pump Seal/O-Ring Kit (Items 4-7, 10, 18, 22, 23 & 12099)	
	12999AV	FKM(viton type) Pump Seal/O-Ring Kit (Items 4-7, 10, 18, 22, 23 & 12099)	

KITS 1½" POLY PUMPS				
PART NO	REPAIR KIT NO	PRICE EA	SEAL KIT NO	PRICE EA
150P-3	12003A		12999A	
150P-3-V	12003AV		12999AV	
150PB	12003A		12999A	
150PB-V	12003AV		12999AV	
150PB-V	12003A		12999A	
150PO-V	12003AV		12999AV	

2" Polypropylene Pumps w/Gas Engines

PUMP FEATURES

- Precision molded construction.
- Lightweight.
- Corrosion resistant.
- Superior design.
- Low maintenance.
- EPDM Standard, FKM (viton type) available.

POWERED BY BRIGGS & STRATTON

2" POLY BEARING PEDESTAL					
PART NO	DESCRIPTION	HP	QTY	INV	PRICE EA
200PB	2" Poly Bearing Pedestal w/ ¾" Shaft & 3 Vane Impeller	N/A	1	STK	
200PB-V	2" Poly Bearing Pedestal w/ ¾" Shaft & 3 Vane Impeller w/FKM (viton type) & 316 SS Seal	N/A	1	MTO	
205PB	2" Poly Bearing Pedestal w/ ¾" Shaft & 5 Vane Impeller	N/A	1	STK	
205PB-V	2" Poly Bearing Pedestal w/ ¾" Shaft & 5 Vane Impellerw/FKM (viton type) & 316 SS Seal	N/A	1	MTO	

2" POLY PUMPS W/GAS ENGINES					
PART NO	DESCRIPTION	HP	QTY	INV	PRICE EA
200P-3	2" Poly Pump w/3.5 HP Briggs & Stratton® Engine	3.5	1	STK	
200P-3-V	2" Poly Pump w/3.5 HP Briggs & Stratton® Engine w/FKM (viton type) & 316 SS Seal	3.5	1	MTO	
200PH-5	2" Poly Pump w/5.5 HP Honda® Engine	5.5	1	STK	
200PH-5E	2" Poly Pump w/5.5 HP Honda® Engine w/ Electric Start	5.5	1	MTO	
200PH-5V	2" Poly Pump w/5.5 HP Honda® Engine w/FKM (viton type) & 316 SS Seal	5.5	1	MTO	
200PH6	2" Poly Pump w/6.5 HP Honda® Engine	6.5	1	STK	
200P6PRO	2" Poly Pump w/6.5 HP Briggs & Stratton® Engine Pro Series	6.5	1	STK	
200P6PROE	2" Poly Pump w/6.5 HP Briggs & Stratton® Engine Pro Series w/Electric Start	6.5	1	MTO	
200P6PROV	2" Poly Pump w/6.5 HP Briggs & Stratton® Engine Pro Series w/FKM (viton type) & 316 SS Seal	6.5	1	MTO	

2" POLY PUMP ONLY					
PART NO	DESCRIPTION	HP	QTY	INV	PRICE EA
200PO	2" Poly Pump Only* w/ 3 Vane Impeller	N/A	1	STK	
200PO-V	2" Poly Pump Only* w/ 3 Vane Impeller w/FKM (viton type) & 316 SS Seal	N/A	1	MTO	
205PO	2" Poly Pump Only* w/ 5 Vane Impeller	N/A	1	STK	
205PO-V	2" Poly Pump Only* w/ 5 Vane Impeller w/FKM (viton type) & 316 SS Seal	N/A	1	MTO	

*Requires ¾" shaft on motor.

CAUTION-WARNING: Please do not run pump dry, restrict or reduce port sizes, or dead head pump. This could cause component failure to pump.

DO NOT USE WITH FLAMMABLE LIQUIDS.

NOTE: Engine warranty service available at authorized Briggs & Stratton and Honda dealers.

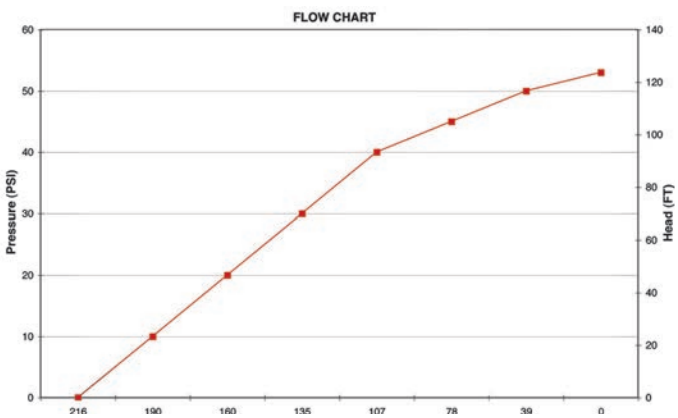

BUNA PUMPS
NOTE: Pumps equipped with Buna Rubber, please use regular EPDM pump prices. Add BN to the end of each part number.

PUMPS

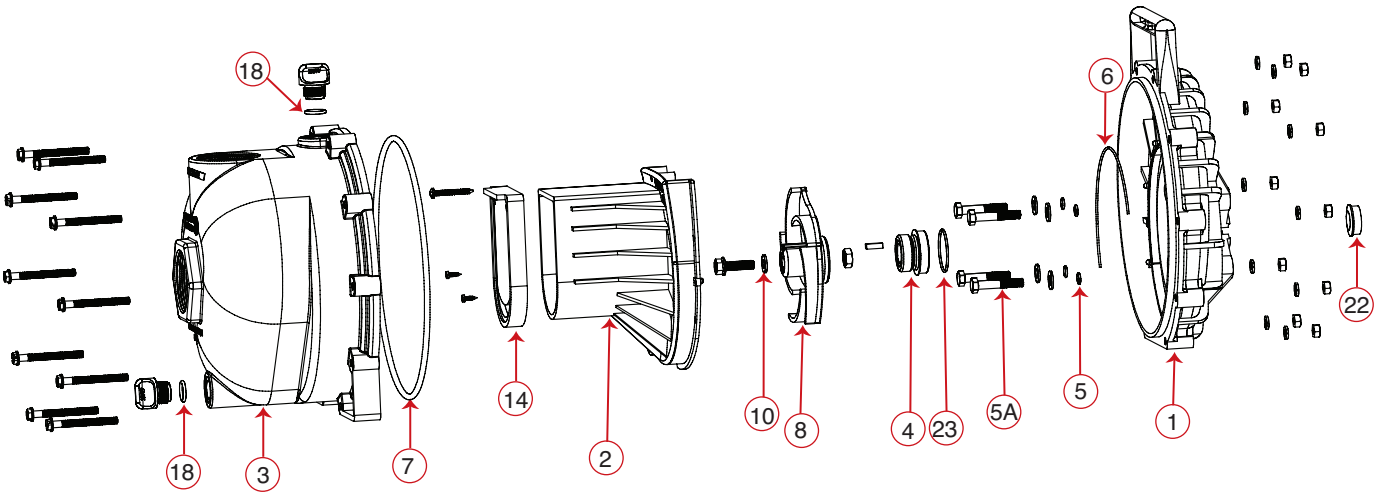

REPLACEMENT PARTS 2" POLY PUMPS			
ITEM NO	PART NO	DESCRIPTION	PRICE EA
1	12703A	Rear Bracket	
2	12702A	Volute	
3	12712A	Body Assembly	
N/S	12099	7/16"-14 x 1.25" HHCS	
	12000A	5 Vane Impeller Repair Kit (Items 4-8, 10, 14, 18, 22, 23 & 12099)	
	12000AV	FKM(viton type) Impeller Repair Kit (Items 4-8, 10, 14, 18, 22, 23 & 12099)	
	12003A	3 Vane Impeller Repair Kit (Items 4-8, 10, 14, 18, 22, 23 & 12099)	
	12999A	Pump Seal/O-Ring Kit (Items 4-7, 10, 18, 22, 23 & 12099)	
	12999AV	FKM(viton type) Pump Seal/O-Ring Kit (Items 4-7, 10, 18, 22, 23 & 12099)	

KITS 2" POLY PUMPS				
PART NO	REPAIR KIT NO	PRICE EA	SEAL KIT NO	PRICE EA
200P-3	12003A		12999A	
200P-3-V	12003AV		12999AV	
200PH-5	12000A		12999A	
200PH-5E	12000A		12999A	
200PH-5V	12000AV		12999AV	
200PH6	12000A		12999A	
200P6PRO	12000A		12999A	
200P6PROV	12000AV		12999AV	
200PB	12003A		12999A	
200PB-V	12003AV		12999AV	
205PB	12000A		12999A	
205PB-V	12000AV		12999AV	
200PO	12003A		12999A	
200PO-V	12003AV		12999AV	
205PO	12000A		12999A	
205PO-V	12000AV		12999AV	

2" Polypropylene Wet Seal Pumps

FEATURES

- New Compact Design!
- Run Dry Capability!
- Double seal contained in ethylene glycol reservoir. Carbon Ceramic seal faces with stainless steel cup & spring with EPDM rubber.
- Pump end separated from engine.
- Large weep holes between pump end and engine.
- "V" shaped for quicker priming.

NEW! Seal reservoir Double Seals!

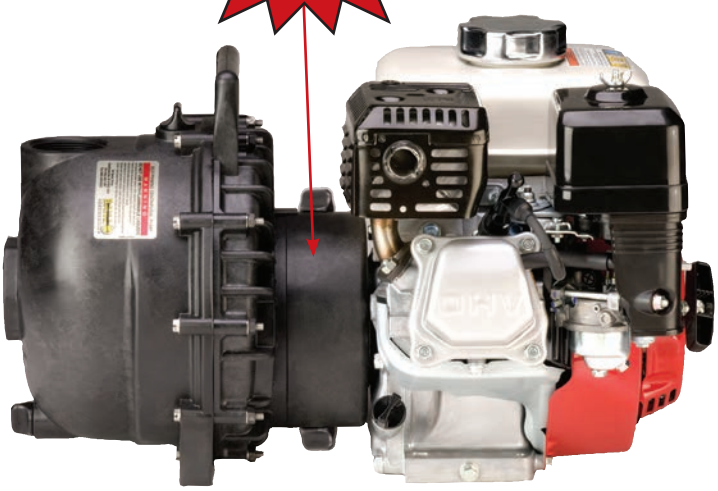

Run Dry Capability!

2" POLY WET SEAL PUMPS W/GAS ENGINES					
PART NO	DESCRIPTION	HP	QTY	INV	PRICE EA
200PH5W	2" Poly Wet Seal Pump w/5.5 HP Honda® Engine	5.5	1	MTO	
200P6PROW	2" Poly Wet Seal Pump w/6.5 HP Briggs & Stratton® Engine Pro Series	6.5	1	MTO	

2" POLY WET SEAL BEARING PEDESTAL					
PART NO	DESCRIPTION	HP	QTY	INV	PRICE EA
200PBW	2" Poly Wet Seal Bearing Pedestal w/ ¾" Shaft & 5 Vane Impeller	N/A	1	MTO	

Bearing Pedestal
¾" shaft for electric motors

DO NOT USE WITH FLAMMABLE LIQUIDS.

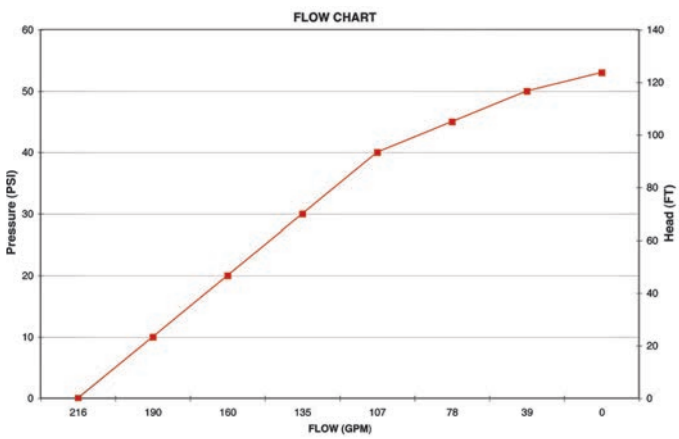

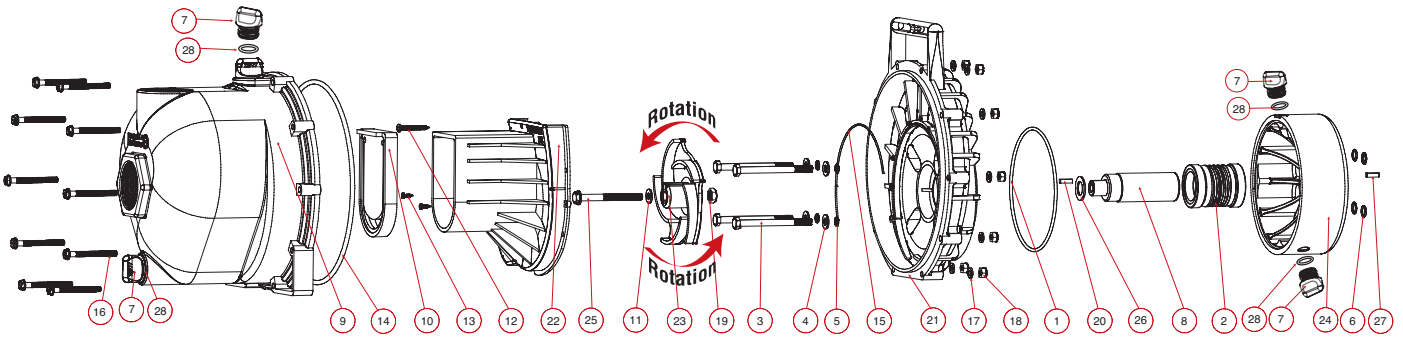

REPLACEMENT PARTS 2" POLY WET SEAL PUMPS				
ITEM	PART NO	DESCRIPTION	QTY	PRICE EA
1	13719	O-Ring	1	
2	15035E	EPDM Mechanical Seal Assembly	1	
3	12034	5/16" -24 x 3 3/4" HHCS	4	
4	12901	5/16" Flat Washer	4	
5	12717	O-Ring for Bracket Screw	4	
6	12709	O-Ring	4	
7	12777	1/2" Plug	4	
8	12155	Adapter Shaft	1	
9	12712A	Body Assembly	1	
10	12705	Check Valve	1	
11	12774VA	Impeller Bolt Gasket	1	
12	12900	#10 x 1 1/2" PPH SMS	1	
13	12725	#6 x 1/2" PPH SMS	2	
14	12719A	Body O-Ring	1	

REPLACEMENT PARTS 2" POLY WET SEAL PUMPS				
ITEM	PART NO	DESCRIPTION	QTY	PRICE EA
15	12754	O-Ring Segment	1	
16	12720	1/4" - 20 x 2 1/2" Sl Ind HWHS	10	
17	V07018	1/4" Lock Washer	10	
18	V07019	1/4" - 20 Hex Nut	10	
19	12775A	7/16" - 14 Hex Nut	1	
20	12902A	3/16" SQ. x 5/8" Key	2	
21	12707W	Wet Seal Rear Bracket	1	
22	12702A	Volute	1	
23	12772	Impeller	1	
24	12202W	Wet Seal Reservoir	1	
25	12766	5/16" - 24 x 3 1/4" HFS	1	
26	CV10175	Gasket	1	
27	12902A	1/4" SQ. 3/4" Key Stock	1	
28	UV15163	O-Ring for Drain Plug	4	

2" Polypropylene Pumps with Electric Motors

FEATURES

- Additional drive unit protection with added 1" spacer for ultimate protection.
- Special non-metallic mechanical seal designed for better chemical resistance.
- All elastomers are FKM (viton type).
- All internal fasteners are TFE coated stainless steel.
- The Banjo "Super Slinger" included for even more drive unit protection (not shown).

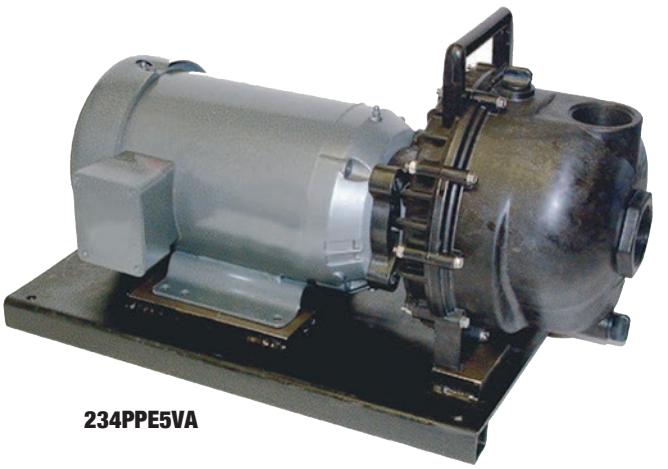

234PPE5VA

2" POLY PUMPS W/ELECTRIC MOTORS					
PART NO	DESCRIPTION	HP	QTY	INV	PRICE EA
234PPE5	2" Poly Pump w/5.0 HP Three Phase Electric Motor w/ EPDM Elastomers	5.0	1	MTO	
234PPE5V	2" Poly Pump w/5.0 HP Three Phase Electric Motor w/FKM (viton type)Elastomers	5.0	1	MTO	
234PPE51	2" Poly Pump w/5.0 HP Single Phase Electric Motor w/ EPDM Elastomers	5.0	1	MTO	
234PPE51V	2" Poly Pump w/5.0 HP Single Phase Electric Motor w/FKM (viton type)Elastomers	5.0	1	MTO	

1½" & 2" POLY PUMPS FOR 56C FACED MOTORS					
PART NO	DESCRIPTION	HP	QTY	INV	PRICE EA
150PEO	1½" Poly Pump w/56C Face Adapter	N/A	1	MTO	
200PEO	2" Poly Pump w/56C Face Adapter	N/A	1	MTO	

CAUTION-WARNING: Please do not run pump dry, restrict or reduce port sizes, or dead head pump. This could cause component failure to pump.

DO NOT USE WITH FLAMMABLE LIQUIDS.

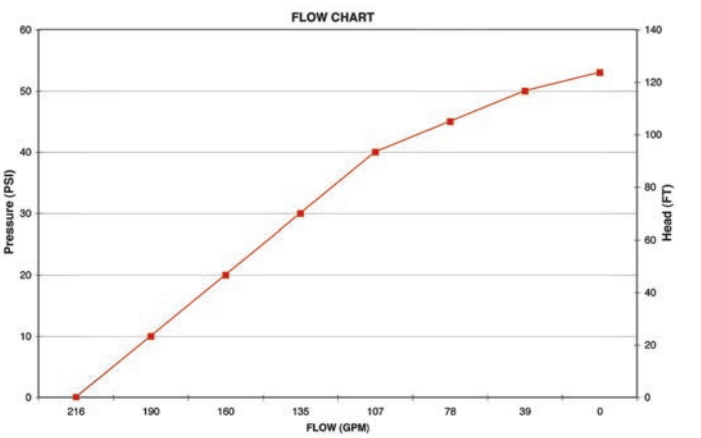

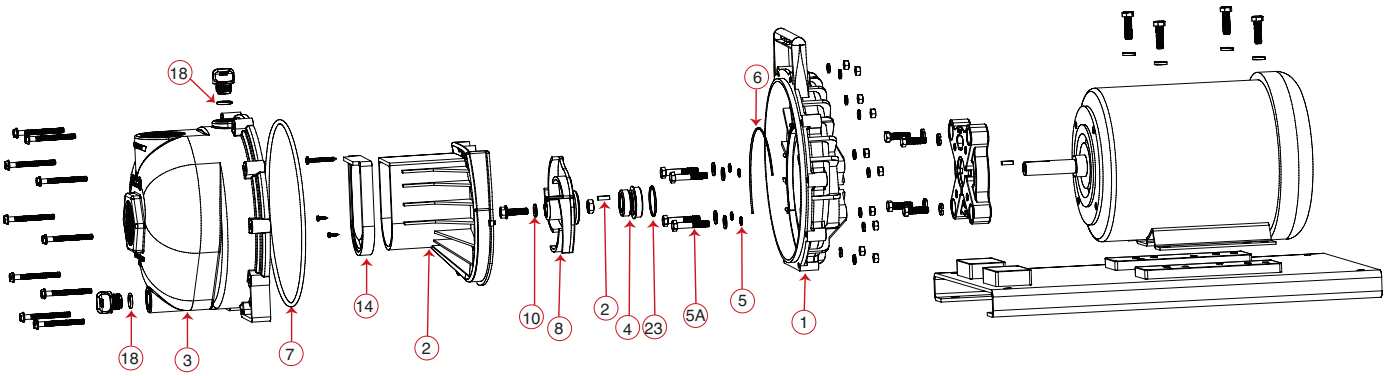

REPLACEMENT PARTS 1 1/2" & 2" POLY PUMPS			
ITEM NO	PART NO	DESCRIPTION	PRICE EA
1	12703A	Rear Bracket	
2	12702A	Volute	
3	12711A	1½" Body Assembly	
3	12712A	2" Body Assembly	
N/S	12099	7/16"-14 x 1.25" HHCS	
	12756	Frame Adapter Kit (Items 5A,5,2,17704,12046,V10119, 12502, 12503, 15751, 15752)	
	12000A	5 Vane Impeller Repair Kit (Items 4-8, 10, 14, 18, 23 & 12099)	
	12000AV	FKM(viton type) Impeller Repair Kit (Items 4-8, 10, 14, 18, 22, 23 & 12099)	
	12003A	3 Vane Impeller Repair Kit (Items 4-8, 10, 14, 18, 23 & 12099)	
	12999A	Pump Seal/O-Ring Kit (Items 4-7, 10, 18, 23 & 12099)	
	12999AV	FKM(viton type) Pump Seal/O-Ring Kit (Items 4-7, 10, 18, 23 & 12099)	

KITS 1 1/2" & 2" POLY PUMPS						
PART NO	REPAIR KIT NO	PRICE EA	SEAL KIT NO	PRICE EA	FRAME ADAPTER KIT	PRICE EA
234PPE5	12000A		12999A		12756	
234PPE5V	12000AV		12999AV		12756	
234PPE51	12000A		12999A		12756	
234PPE51V	12000AV		12999AV		12756	
150PEO	12003A		12999A		12756	
200PEO	12003A		12999A		12756	

2" Polypropylene Hydraulic Pumps

PUMP FEATURES

- Precision molded construction.
- Lightweight.
- Corrosion resistant.
- Superior design.
- Low maintenance.

GRESEN® MGG2 HYDRAULIC MOTOR

- Hydraulic fluid capacity
  Minimum 6 Gallons / Maximum 10 Gallons.
- 12 H.P. Motor.
- Open or closed system.
- 3600 R.P.M.

CAUTION-WARNING: Please do not run pump dry, restrict or reduce port sizes, or dead head pump. This could cause component failure to pump.

DO NOT USE WITH FLAMMABLE LIQUIDS.

2" POLY PUMPS W/HYDRAULIC MOTORS					
PART NO	DESCRIPTION	HP	QTY	INV	PRICE EA
200PHA	2" Poly Pump without Hydraulic Motor	N/A	1	MTO	
200PHY	2" Poly Pump w/12 HP Hydraulic Motor	12.0	1	STK	
200PHYW	2" Poly Wet Seal Pump w/12 HP Hydraulic Motor	12.0	1	MTO	

SPOOL VALVE ASSEMBLY DIAGRAM

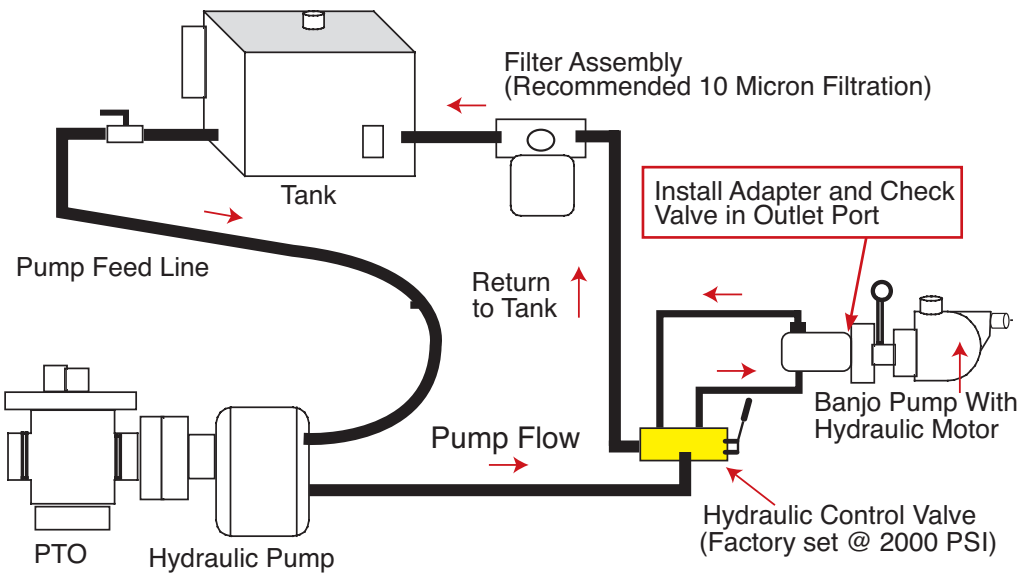

Recommendation:
We recommend using the motor spool control valve or a suitable equivalent. The lack of such a valve in this circuit may cause failure to the hydraulic motor.

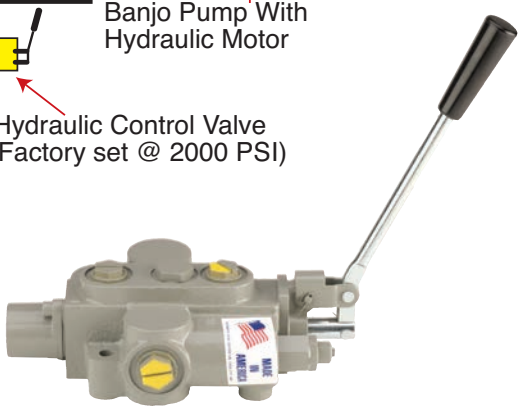

HYDRAULIC MOTOR SPOOL VALVE					
PART NO	DESCRIPTION	HP	QTY	INV	PRICE EA
HSV1000	Hydraulic Motor Spool Valve	N/A	1		

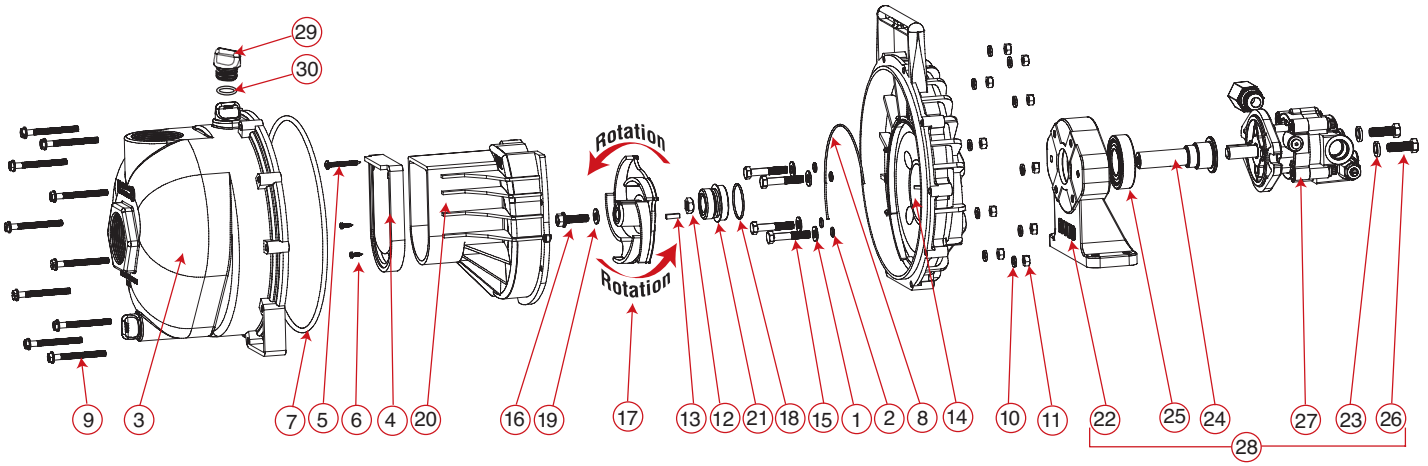

HYDRAULIC MOTOR DATA	
U.S. Gallons/Rev.	0.0025
Cubic Inches/Rev.	0.580
Liters/Rev.	0.0097
Max Hydraulic Pressure	2000 PSI
Min Hydraulic Pressure	200 PSI
Inlet Port	SAE 10 (7/8-14 UNF-2B)
Outlet Port	SAE 10 (7/8-14 UNF-2B)
Minimum GPM Required	6 GPM 2400 RPM
Maximum GPM Required	10 GPM 4000 RPM
Ideal GPM Required	9 GPM 3600 RPM
CONNECTION INFORMATION	
Inlet	"A" Port
Outlet	"B" Port
Supplied check valve is to ensure proper rotation of the Banjo pump. Place check valve in outlet port (marked "B") for proper right hand rotation.	
SPOOL VALVE INFORMATION	
Required Outlet Flow	Min 6 GPM / Max 10 GPM
Required System Pressure	Min 600 PSI / Max 3000 PSI

REPLACEMENT PARTS 2" POLY PUMPS

ITEM NO	PART NO	DESCRIPTION	PRICE EA
3	12712A	Body Assembly	
14	12703A	Rear Bracket	
20	12702A	Volute	
N/S	12099	7/16"-14 x 1.25" HHCS	
	12000A	5 Vane Impeller Repair Kit (Items 2,4,7,8,17,19,21,30, 12099)	
	12000AV	FKM(viton type) Impeller Repair Kit (Items 2,4,7,8,17,19,21,30, 12099)	
	12999A	Pump Seal/O-Ring Kit (Items 2,4,7,8,17,19,21,30, 12099)	
	12999AV	FKM(viton type) Pump Seal/O-Ring Kit (Items 4-7,8,10,18, 23 & 12099)	

KITS 2" POLY PUMPS

PART NO	EPDM REPAIR KIT NO	PRICE EA	FKM REPAIR KIT NO	PRICE EA	EPDM SEAL KIT NO	PRICE EA	FKM SEAL KIT NO	PRICE EA	HYDRAULIC MOTOR SEAL KIT	PRICE EA
200PHA	12000A		12000AV		12999A		12999AV		N/A	
200PHY	12000A		12000AV		12999A		12999AV		HY1003	

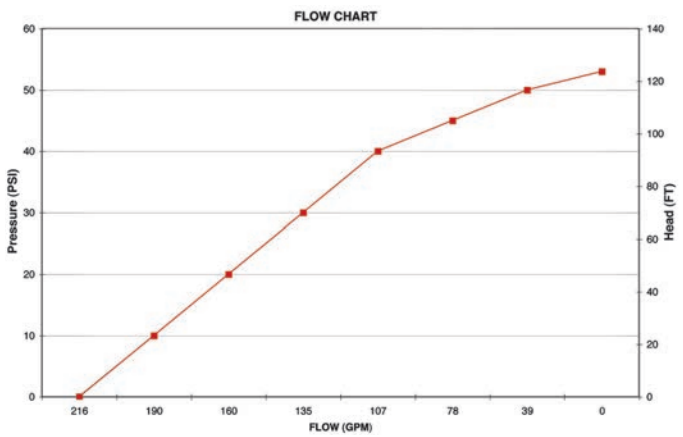

NOTE: Please see our website for 200PHYW replacement parts.

2" Polypropylene Manifold SUPER Pumps with Gas Engines

SUPER2

FEATURES

- Precision molded construction.
- Lightweight.
- Corrosion resistant.
- Superior design.
- Low maintenance.
- EPDM Standard, FKM (viton type) available.

High performance impeller for maximum flow! 255 GPM!

NOTE: The M230 Super Pump Series have become the M220 Super Pump Series

2" SUPER POLY MANIFOLD PUMPS W/GAS ENGINES					
PART NO	DESCRIPTION	HP	QTY	INV	PRICE EA
M220PH5	2" Poly Manifold Pump w/5.5 HP Honda® Engine	5.5	1	MTO	
M220PH5E	2" Poly Manifold Pump w/5.5 HP Honda® Engine w/Electric Start	5.5	1	MTO	
M220PH6	2" FP Manifold Super Pump w/6.5 HP Honda® Engine	6.5	1	STK	
M220P6PRO	2" FP Manifold Super Pump w/6.5 HP Briggs & Stratton® Pro Series Engine	6.5	1	STK	
M220P6PROE	2" FP Manifold Super Pump w/6.5 HP Briggs & Stratton® Pro Series Engine w/ Electric Start	6.5	1	MTO	

CAUTION-WARNING: Please do not run pump dry, restrict or reduce port sizes, or dead head pump. This could cause component failure to pump.

DO NOT USE WITH FLAMMABLE LIQUIDS.

NOTE: Engine warranty service available at authorized Briggs & Stratton and Honda dealers.

2" POLY MANIFOLD BEARING PEDESTALS					
PART NO	DESCRIPTION	HP	QTY	INV	PRICE EA
M220PB	2" Poly Manifold Bearing Pedestal w/ ¾" Shaft & 4 Vane Impeller	N/A	1	MTO	

2" POLY MANIFOLD PUMP ONLYS					
PART NO	DESCRIPTION	HP	QTY	INV	PRICE EA
M220PO	2" Poly Manifold Pump Only w/ ¾" Shaft & 4 Vane Impeller	N/A	1	MTO	

NOTE: We recommend using a minimum 5 HP engine.

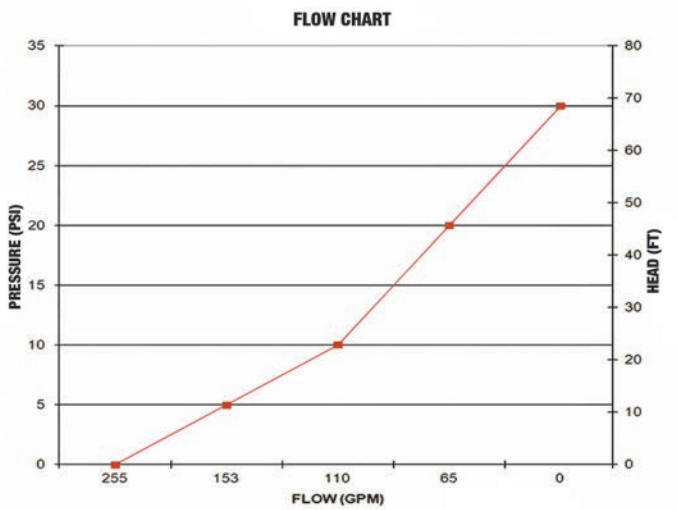

See page 81-85 for fittings and clamps.

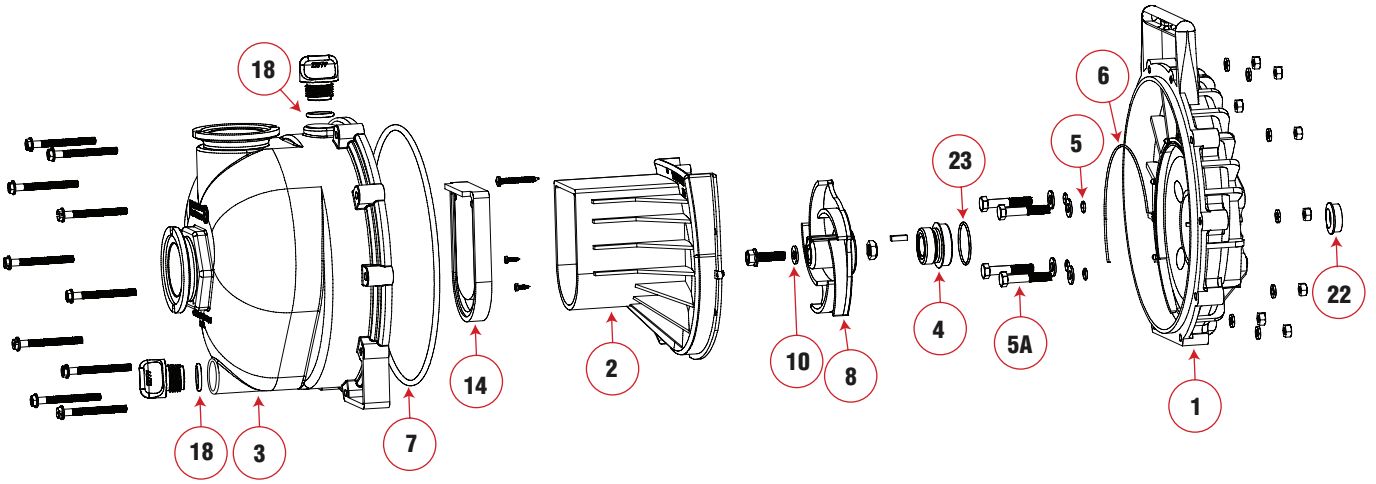

REPLACEMENT PARTS 2" SUPER MANIFOLD POLY PUMPS			
ITEM NO	PART NO	DESCRIPTION	PRICE EA
1	12703A	Rear Bracket	
2	13702	Volute	
3	M12712	Body Assembly	
N/S	12099	7/16"-14 x 1.25" HHCS	
	12000A	5 Vane Impeller Repair Kit (Items 4-8, 10, 14, 18, 22, 23 & 12099)	
	12000AV	FKM(viton type) Impeller Repair Kit (Items 4-8, 10, 14, 18, 22, 23 & 12099)	
	12999A	Pump Seal/O-Ring Kit (Items 4-7, 10, 18, 22, 23 & 12099)	
	12999AV	FKM(viton type) Pump Seal/O-Ring Kit (Items 4-7, 10, 18, 22, 23 & 12099)	

KITS 2" SUPER MANIFOLD POLY PUMPS								
PART NO	EPDM REPAIR KIT NO	PRICE EA	FKM REPAIR KIT NO	PRICE EA	EPDM SEAL KIT NO	PRICE EA	FKM SEAL KIT NO	PRICE EA
M220PH5	13000		13000V		13999		13999V	
M220PH5E	13000		13000V		13999		13999V	
M220PH6	13000		13000V		13999		13999V	
M220P6PRO	13000		13000V		13999		13999V	
M220P6PROE	13000		13000V		13999		13999V	
M220PB	13000		13000V		13999		13999V	
M220PO	13000		13000V		13999		13999V	

NOTE: Prices listed are suggested retail price only. Please contact your local distributor for pricing.

2" Polypropylene Manifold Wet Seal Pumps with Gas Engines

SUPER2

FEATURES

- New Compact Design!
- Run Dry Capability!
- Double seal contained in ethylene glycol reservoir. Carbon Ceramic seal faces with stainless steel cup & spring with EPDM rubber.
- Pump end separated from engine.
- Large weep holes between pump end and engine.
- "V" shaped for quicker priming.

High performance impeller for maximum flow! 255 GPM!

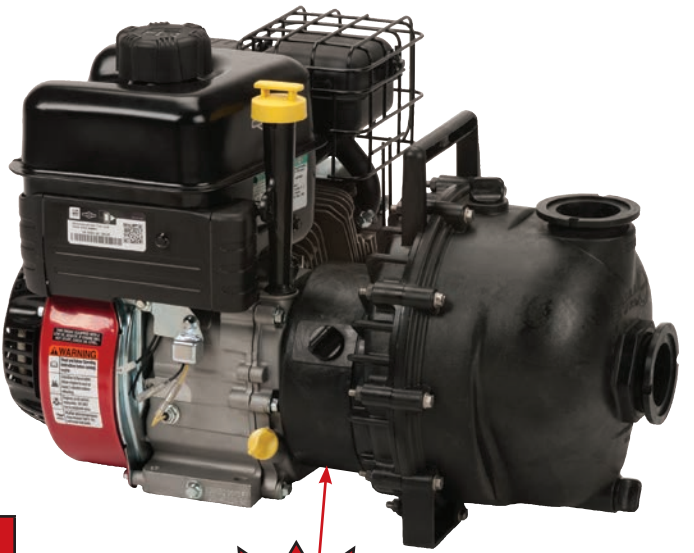

NOTE: The M230 Super Pump Series have become the M220 Super Pump Series

NEW! Seal reservoir Double Seals!

Run Dry Capability!

2" POLY MANIFOLD WET SEAL PUMPS W/GAS ENGINES					
PART NO	DESCRIPTION	HP	QTY	INV	PRICE EA
M220PH5W	2" Poly Manifold Wet Seal Pump w/5.5 HP Honda® Engine	5.5	1	MTO	
M220PH5EW	2" Poly Manifold Wet Seal Pump w/5.5 HP Honda® Engine w/Electric Start	5.5	1	MTO	
M220PH6W	2" Poly Manifold Wet Seal Pump w/6.5 HP Honda® Engine	6.5	1	MTO	
M220P6PROW	2" Poly Manifold Wet Seal Pump w/6.5 HP Briggs & Stratton® Engine Pro Series	6.5	1	MTO	
M220P6PROEW	2" Poly Manifold Wet Seal Pump w/6.5 HP Briggs & Stratton® Engine Pro Series w/ Electric Start	6.5	1	MTO	

2" POLY MANIFOLD WET SEAL BEARING PEDESTAL					
PART NO	DESCRIPTION	HP	QTY	INV	PRICE EA
M220PBW	2" Poly Manifold Wet Seal Bearing Pedestal w/ ¾" Shaft & 5 Vane Impeller	N/A	1	MTO	

DO NOT USE WITH FLAMMABLE LIQUIDS.

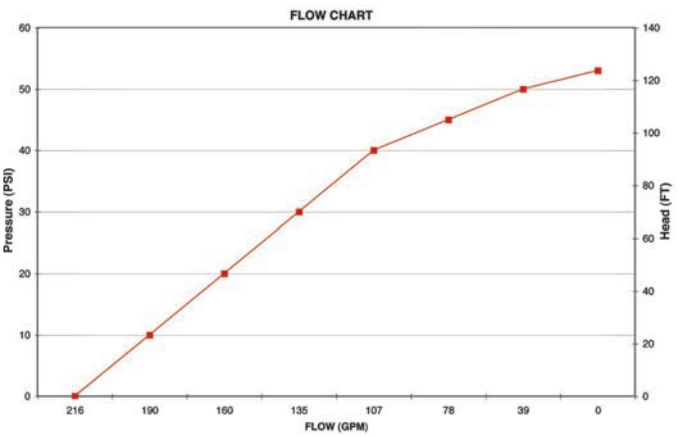

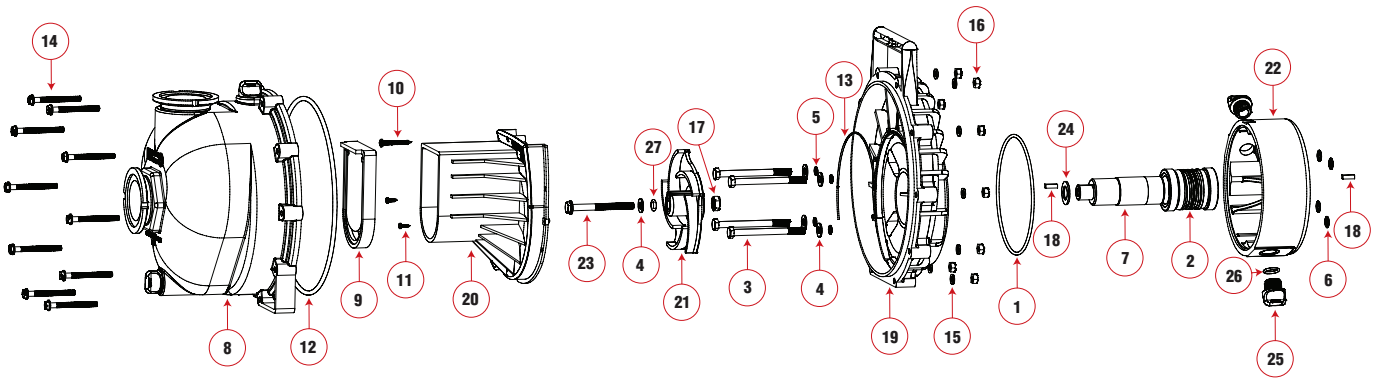

REPLACEMENT PARTS 2" POLY MANIFOLD WET SEAL PUMPS				
ITEM	PART NO	DESCRIPTION	QTY	PRICE EA
1	13719	O-Ring	1	
2	15035E	EPDM Mechanical Seal Assembly	1	
3	12034	5/16" -24 x 3 3/4" HHCS	4	
4	12901	SS Rear Bracket Washer	5	
5	12717	O-Ring for Screw Head	4	
6	12709	O-Ring	4	
7	12155	Adapter Shaft	1	
8	M12712	2" FP Manifold Pump Body Assembly	1	
9	12705	Poly Pump Check Valve	1	
10	12900	SS Upper Volute Screw	1	
11	12725	SS Volute Screws	2	
12	12719A	Body O-Ring	1	
13	12754	O-Ring Segment	1	

REPLACEMENT PARTS 2" POLY MANFIOLD WET SEAL PUMPS				
ITEM	PART NO	DESCRIPTION	QTY	PRICE EA
14	12720	SS Body Screws	10	
15	V07018	1/4" SS Lock Washer	10	
16	V07019	1/4" SS Nut	10	
17	12775A	Impeller Hex Nut	1	
18	12902A	Impeller Key	1	
19	12707W	Wet Seal Rear Bracket	1	
20	13702	Poly Pump Volute	1	
21	13772	Impeller	1	
22	12202W	Wet Seal Reservoir	1	
23	12766	5/16" - 24 x 3 1/4" HFS	1	
24	CV10175	Gasket	1	
25	12777	1/2" Plug	2	
26	UV15163	Prime/Drain Plug O-Ring	2	
27	A203V	O-Ring	1	

3" Polypropylene Pumps

PUMP FEATURES
- High strength polypropylene.
- Corrosion resistant.
- Lightweight – portable.
- High performance impellers.
- EPDM Standard, FKM (viton type) available.

APPLICATIONS
- Agricultural pump.
- Contractor pump.
- Emergency use: fires & floods.

CAUTION-WARNING: Please do not run pump dry, restrict or reduce port sizes, or dead head pump. This could cause component failure to pump.

DO NOT USE WITH FLAMMABLE LIQUIDS.

NOTE: Engine warranty service available at authorized Briggs & Stratton and Honda dealers.

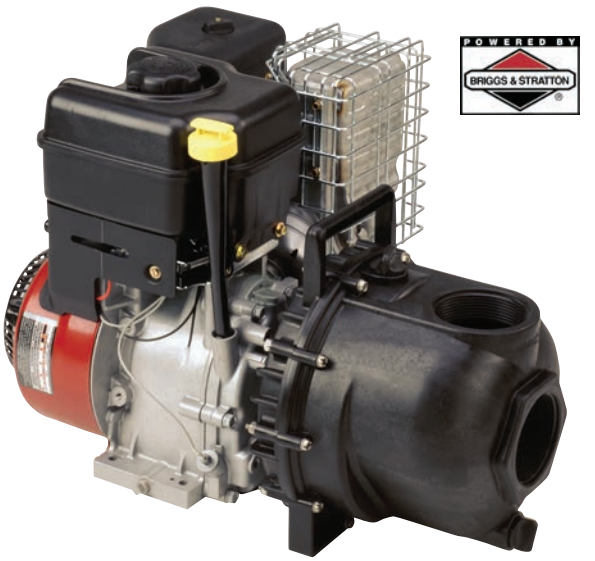

3" POLY PUMPS W/GAS ENGINES

PART NO	DESCRIPTION	HP	QTY	INV	PRICE EA
300PH-6	3" Poly Pump w/6.5 HP Honda® Engine	6.5	1	STK	
300P11PRO	3" Poly Pump w/11 HP Briggs & Stratton® Engine Pro Series w/Electric Start & Pull Rope	11	1	STK	

3" POLY BEARING PEDESTAL

PART NO	DESCRIPTION	HP	QTY	INV	PRICE EA
300PB	3" Poly Bearing Pedestal w/ ¾" Shaft & 4 Vane Impeller	N/A	1	STK	

3" POLY PUMP ONLY

PART NO	DESCRIPTION	HP	QTY	INV	PRICE EA
300PO	3" Poly Pump Only w/ ¾" Shaft & 4 Vane Impeller Unassembled	N/A	1	STK	

3" POLY MANIFOLD PUMPS W/GAS ENGINES

PART NO	DESCRIPTION	HP	QTY	INV	PRICE EA
M300PH6	3" Poly Manifold Pump w/6.5 HP Honda® Engine	6.5	1	MTO	
M300P6PRO	3" Poly Manifold Pump w/6.5 HP Briggs & Stratton® Pro Series Engine	6.5	1	MTO	
M300P11PRO	3" Poly Manifold Pump w/11 HP Briggs & Stratton® Pro Series Engine	11	1	MTO	

3" POLY MANIFOLD BEARING PEDESTAL

PART NO	DESCRIPTION	HP	QTY	INV	PRICE EA
M300PB	3" Poly Manifold Bearing Pedestal w/ ¾" Shaft & 4 Vane Impeller	N/A	1	MTO	

PEDESTAL PUMP 300PB & PUMP ONLY 300PO

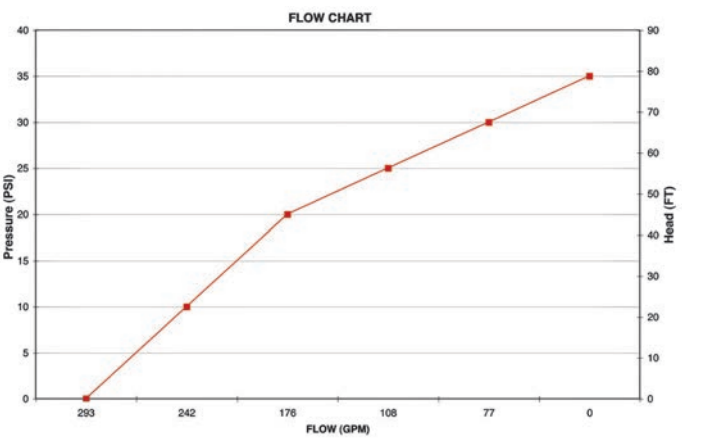

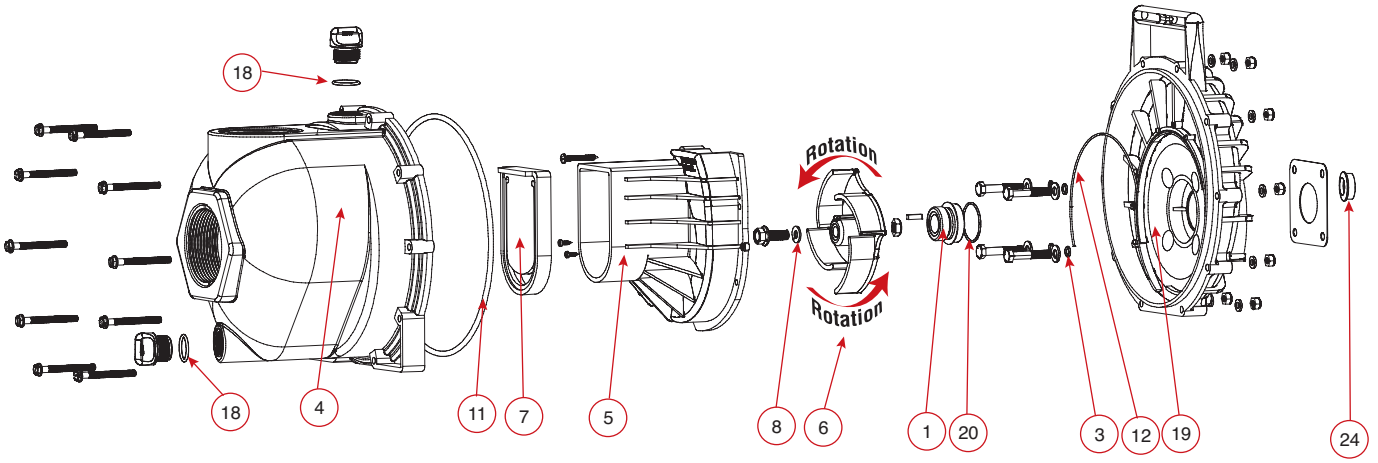

REPLACEMENT PARTS 3" POLY PUMPS			
ITEM NO	PART NO	DESCRIPTION	PRICE EA
19	12703A	Rear Bracket	
5	13702	Volute	
4	13712	Body Assembly	
4	M13712	Manifold Body Assembly	
N/S	12099*	7/16"-14 x 1.25" HHCS	
	13000	4 Vane Impeller Repair Kit (Items 1, 3, 6-8, 11, 12, 18, 20, 24 & 12099)	
	13000V	4 Vane Impeller FKM (viton type) Repair Kit (Items 1, 3, 6-8, 11, 12, 18, 20, 24 & 12099)	
	13999	Pump Seal/O-Ring Kit (Items 1, 3, 8, 11, 12, 18, 20, 24 & 12099)	
	13999V	FKM(viton type) Pump Seal/O-Ring Kit (Items 1, 3, 8, 11, 12, 18, 20, 24 & 12099)	

KITS 3" POLY MANIFOLD PUMPS								
PART NO	EPDM REPAIR KIT NO	PRICE EA	FKM REPAIR KIT NO	PRICE EA	EPDM SEAL KIT NO	PRICE EA	FKM SEAL KIT NO	PRICE EA
300PH-6	13000		13000V		13999		13999V	
300P11PRO	13000		13000V		13999		13999V	
300PB	13000		13000V		13999		13999V	
300PO	13000		13000V		13999		13999V	
M300PH6	13000		13000V		13999		13999V	
M300P6PRO	13000		13000V		13999		13999V	
M300P11PRO	13000		13000V		13999		13999V	
M300PB	13000		13000V		13999		13999V	

3" Polypropylene Pumps with Hydraulic Motors

HYDRAULIC MOTOR

- Hydraulic fluid capacity
  Minimum 6 gallons / Maximum 10 gallons.
- 12 H.P. Motor.
- Open or closed system.
- 3600 RPM.

CAUTION-WARNING: Please do not run pump dry, restrict or reduce port sizes, or dead head pump. This could cause component failure to pump.

DO NOT USE WITH FLAMMABLE LIQUIDS.

3" POLY PUMPS W/HYDRAULIC MOTORS					
PART NO	DESCRIPTION	HP	QTY	INV	PRICE EA
300PHY	3" Poly Pump w/12 HP Hydraulic Motor	12	1	STK	
300PHYW	3" Poly Wet Seal Pump w/12 HP Hydraulic Motor	12	1	MTO	

SPOOL VALVE ASSEMBLY DIAGRAM

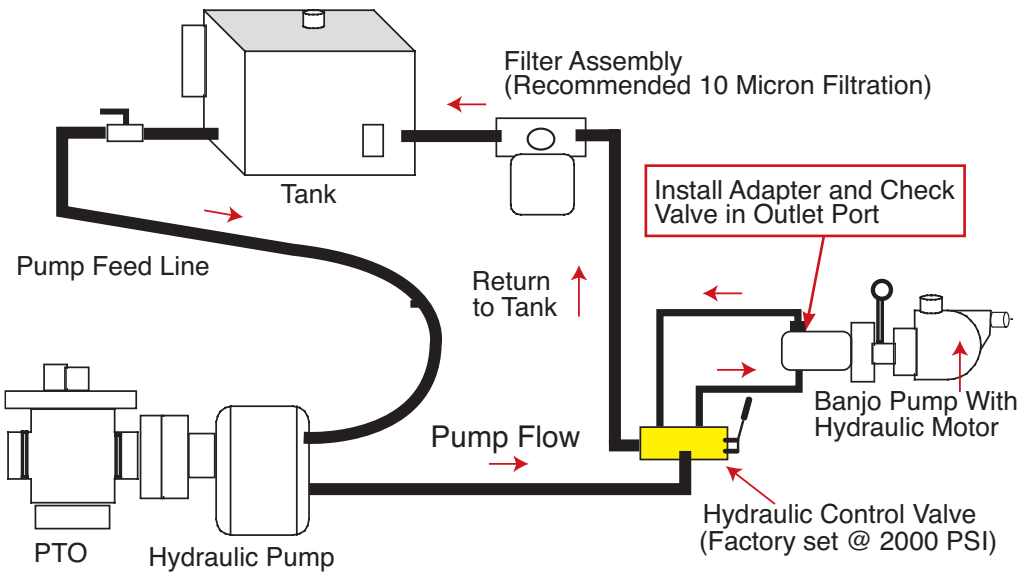

Recommendation:
We recommend using the motor spool control valve or a suitable equivalent. The lack of such a valve in this circuit may cause failure to the hydraulic motor.

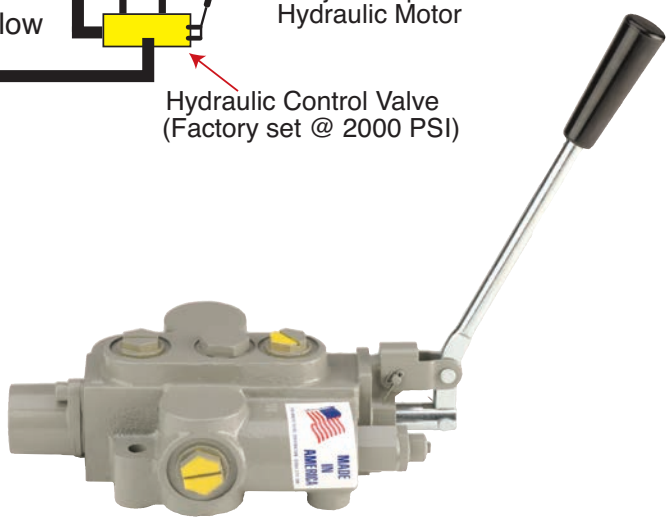

HYDRAULIC MOTOR SPOOL VALVE					
PART NO	DESCRIPTION	HP	QTY	INV	PRICE EA
HSV1000	Hydraulic Motor Spool Valve	N/A	1	MTO	

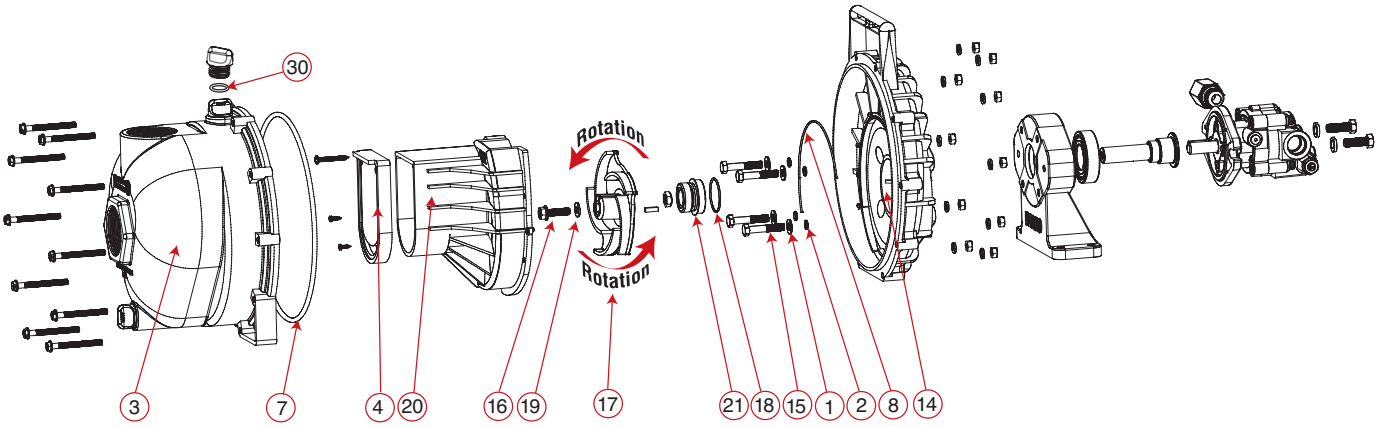

HYDRAULIC MOTOR DATA	
U.S. Gallons/Rev.	0.0025
Cubic Inches/Rev.	0.580
Liters/Rev.	0.0097
Max Hydraulic Pressure	2000 PSI
Min Hydraulic Pressure	200 PSI
Inlet Port	SAE 10 (7/8-14 UNF-2B)
Outlet Port	SAE 10 (7/8-14 UNF-2B)
Minimum GPM Required	6 GPM 2400 RPM
Maximum GPM Required	10 GPM 4000 RPM
Ideal GPM Required	9 GPM 3600 RPM
CONNECTION INFORMATION	
Inlet	"A" Port
Outlet	"B" Port
Supplied check valve is to ensure proper rotation of the Banjo pump. Place check valve in outlet port (marked "B") for proper right hand rotation.	
SPOOL VALVE INFORMATION	
Required Outlet Flow	Min 6 GPM / Max 10 GPM
Required System Pressure	Min 600 PSI / Max 3000 PSI

REPLACEMENT PARTS 3" POLY PUMPS

ITEM NO	PART NO	DESCRIPTION	PRICE EA
14	12703A	Rear Bracket	
20	13702	Volute	
3	13712	Body Assembly	
N/S	12099	7/16"-14 x 1.25" HHCS	
	13000	4 Vane Impeller Repair Kit (Items 2,4,7-8,16-19, 21, 30, 12099)	
	13000V	4 Vane Impeller FKM (viton type) Repair Kit (Items 2,4,7-8,16-19, 21, 30, 12099)	
	13999	Pump Seal/O-Ring Kit (Items 2,4,7-8,16,18,19, 21, 30, 12099)	
	13999V	FKM(viton type) Pump Seal/O-Ring Kit (Items 2,4,7-8,16, 18,19, 21, 30, 12099)	

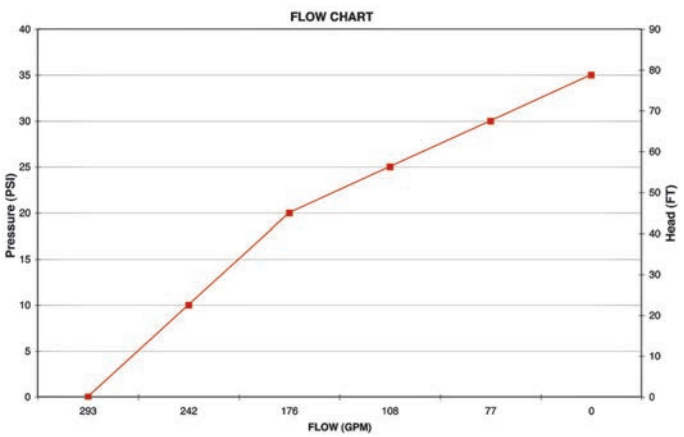

NOTE: Please see our website for 300PHYW replacement parts.

KITS 3" POLY MANIFOLD PUMPS

PART NO	EPDM REPAIR KIT NO	PRICE EA	FKM REPAIR KIT NO	PRICE EA	EPDM SEAL KIT NO	PRICE EA	FKM SEAL KIT NO	PRICE EA	HYDRAULIC MOTOR SEAL KIT	PRICE EA
300PHY	13000		13000V		13999		13999V		HY1013	

3" Polypropylene Manifold Wet Seal Pumps with Gas Engines

FEATURES

- New Compact Design!
- Run Dry Capability!
- Double seal contained in ethylene glycol reservoir. Carbon Ceramic seal faces with stainless steel cup & spring with EPDM rubber.
- Pump end separated from engine.
- Large weep holes between pump end and engine.
- "V" shaped for quicker priming.

Run Dry Capability!

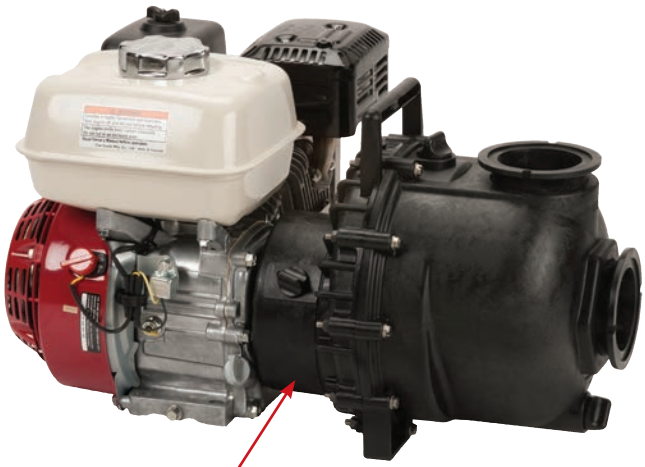

Seal reservoir Double Seals!

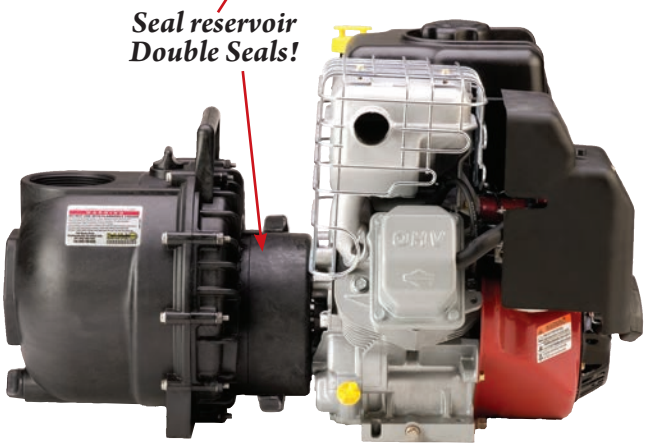

3" POLY WET SEAL PUMPS W/GAS ENGINES					
PART NO	DESCRIPTION	HP	QTY	INV	PRICE EA
300PH6W	3" Poly Wet Seal Pump w/6.0 HP Honda® Engine	6.0	1	MTO	
300PH11W	3" Poly Wet Seal Pump w/11 HP Honda® Engine w/Electric Start & Pull Rope	11	1	MTO	
300P6PROW	3" Poly Wet Seal Pump w/6.0 HP Briggs & Stratton® Engine Pro Series	6.0	1	MTO	
300P11PROW	3" Poly Wet Seal Pump w/11 HP Briggs & Stratton® Engine Pro Series w/Electric Start & Pull Rope	11	1	MTO	
300PH13W	3" Poly Wet Seal Pump w/13 HP Honda® Engine w/Electric Start & Pull Rope	13	1	MTO	

Truck shipments only.

3" POLY MANIFOLD WET SEAL PUMPS W/GAS ENGINES					
PART NO	DESCRIPTION	HP	QTY	INV	PRICE EA
M300PH6W	3" Poly Manifold Wet Seal Pump w/6.0 HP Honda® Engine	6.0	1	MTO	
M300PH11W	3" Poly Manifold Wet Seal Pump w/11 HP Honda® Engine w/Electric Start & Pull Rope	11	1	MTO	
M300P11PROW	3" Poly Wet Seal Pump w/11 HP Briggs&Stratton® Engine Pro Series w/ Electric Start & Pull Rope	11	1	MTO	

3" POLY WET SEAL BEARING PEDESTAL					
PART NO	DESCRIPTION	HP	QTY	INV	PRICE EA
300PBW	3" Poly Wet Seal Bearing Pedestal w/ ¾" Shaft & 4 Vane Impeller	N/A	1	MTO	

3" POLY MANIFOLD WET SEAL BEARING PEDESTAL					
PART NO	DESCRIPTION	HP	QTY	INV	PRICE EA
M300PBW	3" Poly Manifold Wet Seal Bearing Pedestal w/ ¾" Shaft & 4 Vane Impeller	N/A	1	MTO	

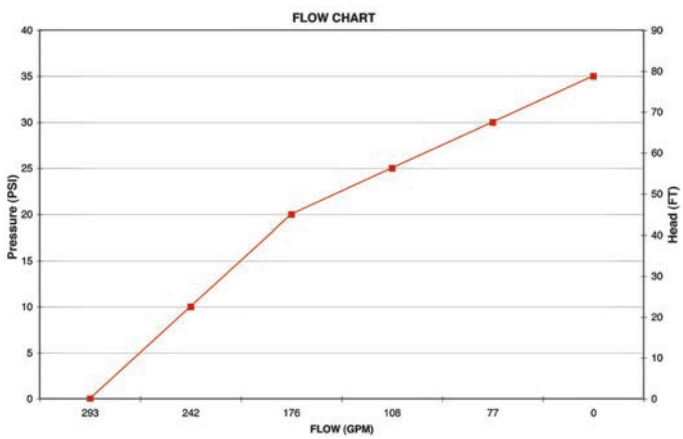

DO NOT USE WITH FLAMMABLE LIQUIDS.

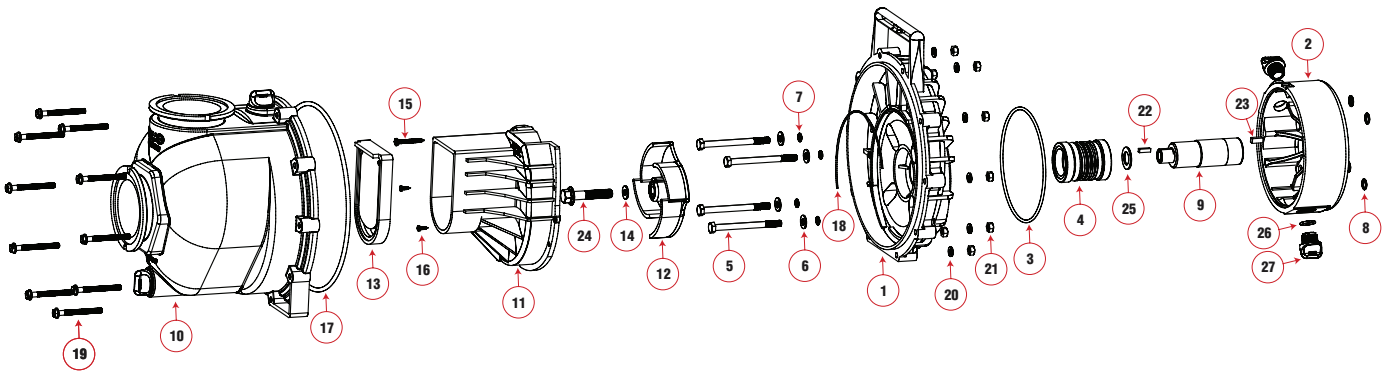

REPLACEMENT PARTS 3" MANIFOLD POLY WET SEAL PUMPS				
ITEM	PART NO	DESCRIPTION	QTY	PRICE EA
1	12703AW	Wet Seal Rear Bracket for 11 HP Honda® Engine & 11 HP Briggs & Stratton® Engine	1	
1	12707W	Wet Seal Rear Bracket for 6 HP Honda® Engine, 6 HP Briggs & Stratton® Engine & Bearing Pedestal	1	
2	12201W	Wet Seal Reservoir for 11 HP Honda® Engine & 11 HP Briggs & Stratton® Engine	1	
2	12202W	Wet Seal Reservoir for 6 HP Honda® Engine,6 HP Briggs & Stratton® Engine & Bearing Pedestal	1	
3	13719	O-Ring	1	
4	15035E	Mechanical Seal Assembly EPDM	1	
5	12034	5/16" - 24 x 3 3/4" HHCS	4	
6	12901	5/16" Flat Washer	4	
7	12717	O-Ring for Bracket Screw	4	
8	12709	O-Ring	4	
9	13155	Manifold Adapter Shaft for 11 HP Honda® Engine & 11 HP Briggs & Stratton® Engine	1	
9	12155	Manifold Adapter Shaft for 6 HP Honda® Engine,6 HP Briggs & Stratton® Engine & Bearing Pedestal	1	
9	13055	Adapter Shaft for 11 HP Honda® Engine & 11 HP Briggs & Stratton® Engine	1	
10	M13712	Manifold Body Assembly	1	
10	13712	Body Assembly	1	
11	13702	Volute	1	
12	13772	Impeller	1	

REPLACEMENT PARTS 3" MANIFOLD POLY WET SEAL PUMPS				
ITEM	PART NO	DESCRIPTION	QTY	PRICE EA
13	12705	Check Valve	1	
14	12774VA	Impeller Bolt Gasket	1	
15	12900	#10 x 1 1/2" PPH SMS 18-8 SS	1	
16	12725	#6 x 1/2" PPH SMS 18-8 SS	1	
17	12719A	Body O-Ring	1	
18	12754	O-Ring Segment	1	
19	12720	1/4" - 20 x 2 1/2" SI Ind HWHS	10	
20	V07018	1/4" Lock Washer	10	
21	V07019	1/4" - 20 Hex Nut	10	
22	12902A	3/16" SQ. x 5/8" Key	1	
23	16901	1/4" SQ. 3/4" Key Stock	1	
24	14766	7/16" - 20 x 2 1/2" HFS for 11 HP Honda® Engine & 11 HP Briggs & Stratton® Engine (Manifold)	1	
24	12766	5/16"-24 x 3 1/4" HFS for 6 HP Honda® Engine,6 HP Briggs & Stratton® Engine & Bearing Pedestal (Manifold)	1	
24	13766	3/8" - 24 x 2 1/4" HFS for 11 HP Honda® Engine & 11 HP Briggs & Stratton® Engine	1	
25	CV10175	Gasket	1	
26	UV15163	O-Ring (manifold)	2	
26	13778	O-Ring	2	
27	13777	3/4" Plug	2	
27	12777	1/2" Plug (manifold)	2	

1½" Cast Iron Pumps

FEATURES

- Cast iron construction for rugged dependable service.
- Stainless steel shaft sleeve to protect engine shaft.
- Carbon ceramic seal with stainless steel cup and spring with FKM (viton type) rubber.
- Replaceable inlet and outlet flanges.
- Dynamically balanced impeller.

FEATURES

- Pump Only packs complete and ready for attachment to gasoline engine.
- Pedestal pump for long coupling to electric motor.

IMPORTANT

- Recommended horsepower, listed below, is for water only. Heavier fluids may require additional horsepower or a trimmed impeller.

1½" CAST IRON PUMPS W/GAS ENGINES					
PART NO	DESCRIPTION	HP	QTY	INV	PRICE EA
150PI-3	1½" Cast Iron Pump w/3.5 HP Briggs & Stratton® Engine	3.5	1	MTO	

1½" CAST IRON BEARING PEDESTAL					
PART NO	DESCRIPTION	HP	QTY	INV	PRICE EA
150PBI	1½" Cast Iron Bearing Pedestal w/ ¾" Straight Shaft*	N/A	1	MTO	

CAUTION-WARNING: Please do not run pump dry, restrict or reduce port sizes, or dead head pump. This could cause component failure to pump.

DO NOT USE WITH FLAMMABLE LIQUIDS.

NOTE: Engine warranty service available at authorized Briggs & Stratton and Honda dealers.

SHIPPING: Pumps are truck shipments only.

1½" CAST IRON PUMP ONLY					
PART NO	DESCRIPTION	HP	QTY	INV	PRICE EA
150POI	1½" Cast Iron Pump Only w/ ¾" Shaft Sleeve	N/A	1	MTO	

1½" CAST IRON C-FLANGE PUMPS					
PART NO	DESCRIPTION	HP	QTY	INV	PRICE EA
150POICF5/8	1½" Cast Iron C-Flange Pump w/ ⅝" Shaft Sleeve*	N/A	1	MTO	
150POICF5/8-4.1	1½" Cast Iron C-Flange Pump w/ ⅝" Shaft Sleeve* & 4.1 Impeller	N/A	1	MTO	
150POICF7/8	1½" Cast Iron C-Flange Pump w/ ⅞" Shaft Sleeve*	N/A	1	MTO	
150POICF7/8-4.1	1½" Cast Iron C-Flange Pump w/ ⅞" Shaft Sleeve* & 4.1 Impeller	N/A	1	MTO	
150POICF7/8-4.6	1½" Cast Iron C-Flange Pump w/ ⅞" Shaft Sleeve* & 4.6 Impeller	N/A	1	MTO	

* Recommendation for ⅝" Shaft: 56C Frame Size, 3 HP, 3450 RPM, & 5" Max Impeller for close coupling to electric motors.

⅞" Shaft: 145TC Frame Size, 3 HP, 3450 RPM, & 5" Max Impeller for close coupling to electric motors.

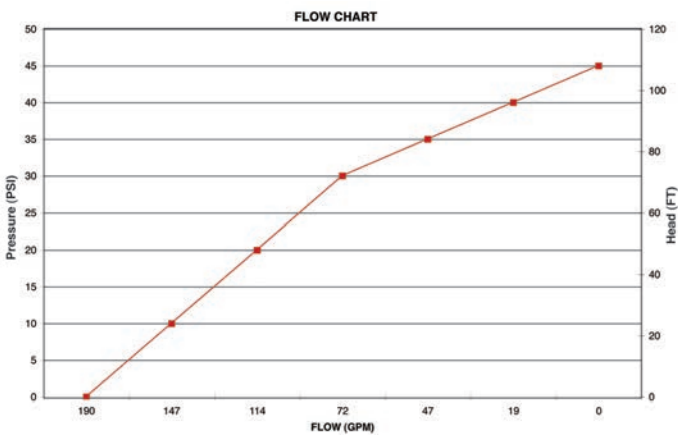

PUMPS

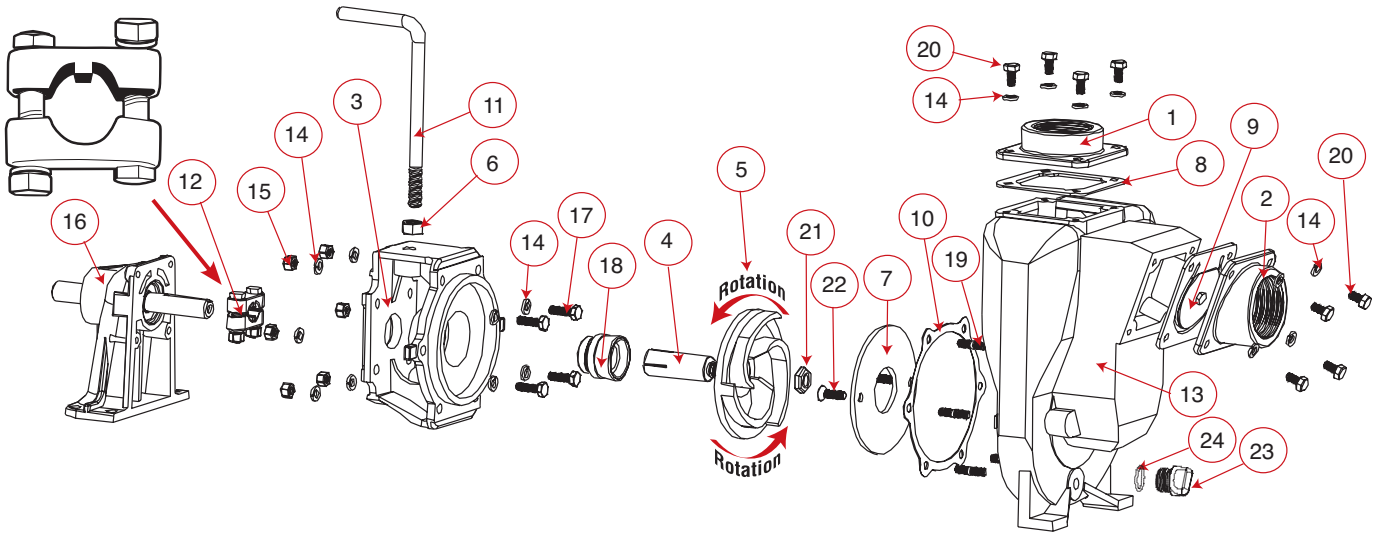

REPLACEMENT PARTS 1½" CAST IRON PUMPS				
ITEM	PART NO	DESCRIPTION	QTY	PRICE EA
1	17001	Threaded Outlet Flange	1	
2	17003	Threaded Inlet Flange	1	
3	17004	Adapter for Gas Engine	1	
3	17046	C-Flange Adapter	1	
4	17005	⅝" Sleeve Drive for Electric Motor	1	
4	17006*	¾" Sleeve Drive	1	
4	17007	⅞" Sleeve Drive for Electric Motor	1	
5	17008*	5" Impeller	1	
5	17008-4.6*	4.6" Trimmed Impeller	1	
5	17008-4.1*	4.1" Trimmed Impeller	1	
6	17010	½" Hex Nut	1	
7	17011*	Wear Plate	1	
8	17013	EPDM Gasket	1	
9	17016	Check Valve Assembly	1	
10	17018*	Gasket Adapter	1	
11	15022	Handle	1	
12	17023	⅝" Clamp for ¾" Shaft Assembly (Old Style)	1	
12	17123	⅝" Clamp for ¾" Shaft Assembly (Keyed)	1	
12	17024	⅞" Clamp for Shaft Assembly	1	

REPLACEMENT PARTS 1½" CAST IRON PUMPS				
ITEM	PART NO	DESCRIPTION	QTY	PRICE EA
13	17026	Pump Housing	1	
14	V10118	5/16" Lock Washer	18	
15	V10119	5/16" - 18 SS Hex Nut	6	
N/S	12882R	Housing	1	
N/S	12883R	Bearing Pedestal w/ ¾" Shaft Only	1	
N/S	12884	Internal Retaining Clip for Pedestal	1	
N/S	12883B	Bearings	2	
16	12882A	Complete Pedestal Assembly	1	
17	17040	5/16" -24 x 1.00" Cap Screw	4	
18	17028*	EPDM Seal Assembly	1	
18	17035*	FKM (viton type) Seal Assembly	1	
18	17035SD*	Severe Duty Seal	1	
19	17042	Stud	6	
20	17019	5/16"-18 x ¾" Cap Screw	8	
21	17009B	⅝" Impeller Nut	1	
22	17130	5/16-18 x 1.00" FHSCS, 18-8 SS	2	
23	12777	½" Plug	1	
24	UV15163	O-Ring	1	
N/S	17033	Z Rails (Pair)	1	
N/S	17100	Repair Kit (Consists of items 4*, 5*, 7,10,18*)	1	

2" Cast Iron Pumps

FEATURES

- Cast iron construction for rugged dependable service.
- Stainless steel shaft sleeve to protect engine shaft.
- Carbon ceramic seal with stainless steel cup and spring with FKM (viton type) rubber.
- Replaceable inlet and outlet flanges.
- Dynamically balanced impeller.

CAUTION-WARNING: Please do not run pump dry, restrict or reduce port sizes, or dead head pump. This could cause component failure to pump.

DO NOT USE WITH FLAMMABLE LIQUIDS.

NOTE: Engine warranty service available at authorized Briggs & Stratton and Honda dealers.
SHIPPING: Pumps are truck shipments only.

2" CAST IRON PUMPS W/GAS ENGINES					
PART NO	DESCRIPTION	HP	QTY	INV	PRICE EA
200PI-3	2" Cast Iron Pump w/3.5 HP Briggs & Stratton® Engine	3.5	1	MTO	
200PI6PRO	2" Cast Iron Pump w/6.5 HP Briggs & Stratton® Engine Pro Series	6.5	1	STK	
200PIH-5	2" Cast Iron Pump w/5.5 HP Honda® Engine	5.5	1	STK	
200PIH5E	2" Cast Iron Pump w/5.5 HP Honda® Engine w/Electric Start	5.5	1	MTO	

2" CAST IRON PUMP ONLY					
PART NO	DESCRIPTION	HP	QTY	INV	PRICE EA
200POI	2" Cast Iron Pump Only w/ ¾" Shaft Sleeve	N/A	1	STK	

2" CAST IRON BEARING PEDESTAL					
PART NO	DESCRIPTION	HP	QTY	INV	PRICE EA
200PBI	2" Cast Iron Bearing Pedestal w/ ¾" Straight Shaft*	N/A	1	STK	

Note:* ¾" straight shaft for long coupling to electric motors

2" CAST IRON C-FLANGE PUMPS					
PART NO	DESCRIPTION	HP	QTY	INV	PRICE EA
200POICF5/8	2" Cast Iron C-Flange Pump w/ 5/8" Shaft Sleeve*	N/A	1	MTO	
200POICF5/8-4.1	2" Cast Iron C-Flange Pump w/ 5/8" Shaft Sleeve* & 4.1 Impeller	N/A	1	MTO	
200POICF5/8-4.6	2" Cast Iron C-Flange Pump w/ 5/8" Shaft Sleeve* & 4.6 Impeller	N/A	1	MTO	
200POICF7/8	2" Cast Iron C-Flange Pump w/ 7/8" Shaft Sleeve*	N/A	1	MTO	
200POICF7/8-4.1	2" Cast Iron C-Flange Pump w/ 7/8" Shaft Sleeve* & 4.1 Impeller	N/A	1	MTO	
200POICF7/8-4.6	2" Cast Iron C-Flange Pump w/ 7/8" Shaft Sleeve* & 4.6 Impeller	N/A	1	MTO	

Note: * Recommendation for 5/8" Shaft: 56C Frame Size, 3 HP, 3450 RPM, & 5" Max Impeller for close coupling to electric motors.
7/8" Shaft: 145TC Frame Size, 3 HP, 3450 RPM, & 5" Max Impeller for close coupling to electric motors.

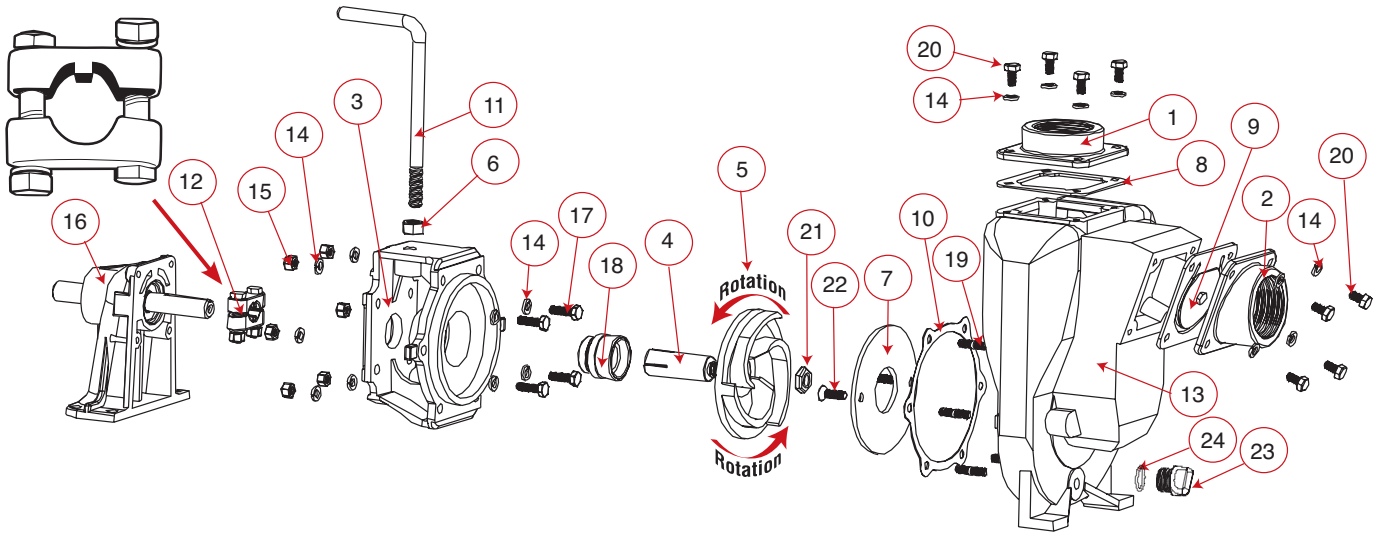

REPLACEMENT PARTS 2" CAST IRON PUMPS				
ITEM	PART NO	DESCRIPTION	QTY	PRICE EA
1	17000	Threaded Outlet Flange	1	
1	M17000	2" Manifold Outlet Flange	1	
2	17002	Threaded Inlet Flange	1	
2	M17002	2" Manifold Inlet Flange	1	
3	17004	Adapter for Gas Engine	1	
3	17046	C-Flange Adapter	1	
4	17005	5/8" Sleeve Drive for Electric Motor	1	
4	17006*	3/4" Sleeve Drive	1	
4	17007	7/8" Sleeve Drive for Electric Motor	1	
5	17008*	5" Impeller	1	
5	17008-4.6	4.6" Trimmed Impeller	1	
5	17008-4.1	4.1" Trimmed Impeller	1	
6	17010	1/2" Hex Nut	1	
7	17011	Wear Plate	1	
8	17013	EPDM Gasket	1	
9	17016	Check Valve Assembly	1	
10	17018	Gasket Adapter	1	
11	15022	Handle	1	
12	17023	5/8" Clamp for 3/4" Shaft Assembly (Old Style)	1	
12	17123	5/8" Clamp for 3/4" Shaft Assembly (Keyed)	1	
12	17024	7/8" Clamp for Shaft Assembly	1	

REPLACEMENT PARTS 2" CAST IRON PUMPS				
ITEM	PART NO	DESCRIPTION	QTY	PRICE EA
13	17026	Pump Housing	1	
14	V10118	5/16" Lock Washer	18	
15	V10119	5/16" - 18 SS Hex Nut	6	
N/S	12882R	Housing	1	
N/S	12883R	Bearing Pedestal w/ 3/4" Shaft Only	1	
N/S	12884	Internal Retaining Clip for Pedestal	1	
N/S	12883B	Bearings	2	
16	12882A	Complete Pedestal Assembly	1	
17	17040	5/16" -24 x 1.00" Cap Screw	4	
18	17028	EPDM Seal Assembly	1	
18	17035*	FKM (viton type) Seal Assembly	1	
18	17035SD	Severe Duty Seal	1	
19	17042	Stud	6	
20	17019	5/16"-18 x 3/4" Cap Screw	8	
21	17009B	5/8" Impeller Nut	1	
22	17130	5/16-18 x 1.00" FHSCS, 18-8 SS	2	
23	12777	1/2" Plug	1	
24	UV15163	O-Ring	1	
N/S	17033	Z Rails (Pair)	1	
N/S	17100	Repair Kit (Consists of items 4*, 5*, 7,10,18*)	1	

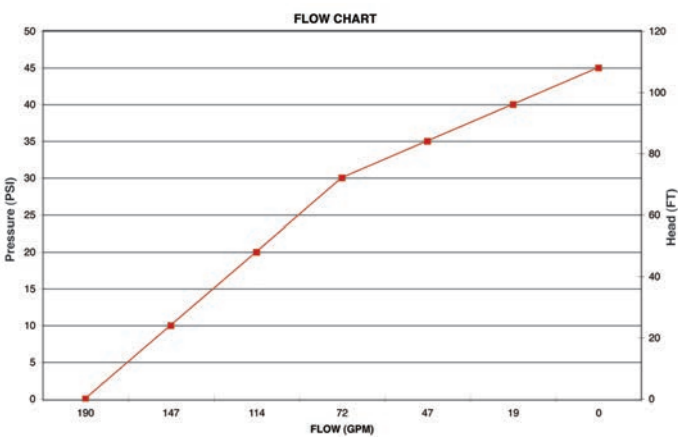

2" Wet Seal Cast Iron Pump

FEATURES

- Run Dry Capability!
- FKM (viton type) double seal contained in ethylene glycol reservoir.
- Dynamically balanced impeller.
- All stainless steel hardware.
- Available in cast iron or 316 stainless steel, with bearing pedestal, gas engine or pump only.

NOTE: Engine warranty service available at authorized Briggs & Stratton and Honda dealers.

***SHIPPING**: Truck shipments only.

Pump Seal & Engine Protection

Run Dry Capability!

Seal reservoir double seals!

2" CAST IRON WET SEAL PUMPS W/GAS ENGINES					
PART NO	DESCRIPTION	HP	QTY	INV	PRICE EA
201PIH5W	2" Cast Iron Wet Seal Pump w/5.5 HP Honda® Engine	5.5	1	STK	
201PIH6W	2" Cast Iron Wet Seal Pump w/6.5 HP Honda® Engine	6.5	1	MTO	
201PI6PROW	2" Cast Iron Wet Seal Pump w/6.5 HP Briggs & Stratton® Engine Pro Series	6.5	1	MTO	

*See page 179 for available base plate.

Bearing Pedestal
¾" shaft for electric motors

Pump Only
for gas engine

POLYETHYLENE SUCTION BASKET STRAINER			
PART NO	DESCRIPTION	QTY	PRICE EA
150SBS	1½" Female Thread Poly Basket	1	
200SBS	2" Female Thread Poly Basket	1	
300SBS	3" Female Thread Poly Basket	1	

2" CAST IRON WET SEAL BEARING PEDESTALS					
PART NO	DESCRIPTION	HP	QTY	INV	PRICE EA
201PBIW	2" Cast Iron Wet Seal Pump w/Bearing Pedestal	N/A	1	MTO	

2" CAST IRON WET SEAL PUMP ONLYS					
PART NO	DESCRIPTION	HP	QTY	INV	PRICE EA
201POIW	2" Cast Iron Wet Seal Pump Only	N/A	1	MTO	

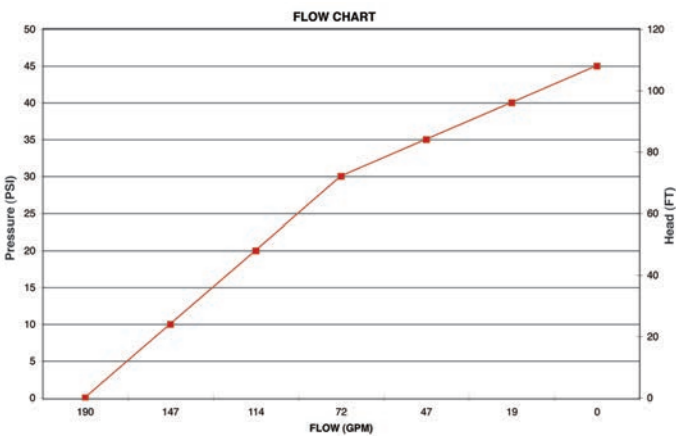

DO NOT USE WITH FLAMMABLE LIQUIDS.

PUMPS

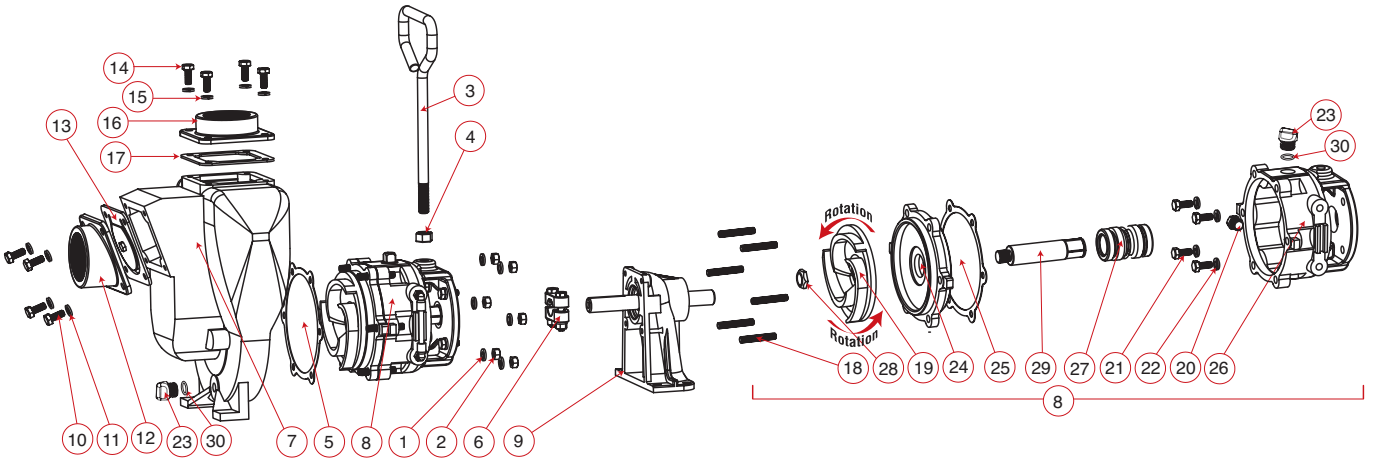

REPLACEMENT PARTS 2" CAST IRON WET SEAL PUMPS				
ITEM	PART NO	DESCRIPTION	QTY	PRICE EA
1	V10118	5/16" Lock Washer	6	
2	V10119	5/16" -18 Hex Nut	6	
3	15022	Handle	1	
4	17010	1/2" Hex Nut	1	
5	17018	Gasket Adapter	1	
6	17123	5/8" Clamp, 3/4" Shaft Assembly Keyed	1	
7	17226	Pump Housing	1	
8	17200A	Wet Seal Assembly	1	
9	12882A	Bearing Pedestal	1	
10	17019	5/16"-18 x 3/4" HHCS	4	
11	V10118	5/16" Lock Washer	4	
12	17002	Inlet Flange	1	
13	17016	EPDM Check Valve Gasket Assembly	1	
14	17019	5/16" -18 x 3/4" HHCS	4	
15	V10118	5/16" Lock Washer	4	

REPLACEMENT PARTS 2" CAST IRON WET SEAL PUMPS				
ITEM	PART NO	DESCRIPTION	QTY	PRICE EA
16	17000	Outlet Flange	1	
17	17013	EPDM Outlet Gasket	1	
18	17242	Housing Stud	6	
19	17208	Impeller	1	
20	17032	Pipe Plug	1	
21	17019	5/16"-18 x 3/4" Cap Screw	4	
22	V10118	5/16" Lock Washer	4	
23	12777	1/2" Plug	2	
24	17202	Cover Plate	1	
25	17018	Gasket Adapter	1	
26	17201A	Reservoir	1	
27	17235	FKM (viton type) Mechanical Seal Assembly	1	
28	17009B	5/8" Impeller Nut	1	
29	17206A	Adapter Shaft	1	
30	UV15163	O-Ring	2	

NOTE: Prices listed are suggested retail price only. Please contact your local distributor for pricing.

2" Cast Iron Pumps with Electric Motors

FEATURES

- Cast iron construction for rugged dependable service.
- Stainless steel shaft sleeve to protect engine shaft.
- Carbon ceramic seal with stainless steel cup and spring with FKM (viton type) rubber.
- Replaceable inlet and outlet flanges.
- Dynamically balanced impeller.

CAUTION-WARNING: Please do not run pumps dry, restrict or reduce port sizes or dead head pumps. This could cause component failure to pump.

DO NOT USE WITH FLAMMABLE LIQUIDS.

2" CAST IRON PUMPS W/ELECTRIC MOTORS					
PART NO	DESCRIPTION	HP	QTY	INV	PRICE EA
234PIE3	2" Cast Iron Pump w/3.0 HP Three Phase Electric Motor	3.0	1	MTO	
234PIE5	2" Cast Iron Pump w/5.0 HP Three Phase Electric Motor	5.0	1	MTO	
234PIE51	2" Cast Iron Pump w/5.0 HP Single Phase Electric Motor	5.0	1	MTO	

2" CAST IRON PUMP ONLY					
PART NO	DESCRIPTION	HP	QTY	INV	PRICE EA
234POI	2" Cast Iron Pump Only w/ 184TC Frame Adapter	N/A	1	MTO	

NOTE: Truck shipments only. Motor warranty service available at authorized dealers.

POLYETHYLENE SUCTION BASKET STRAINER			
PART NO	DESCRIPTION	QTY	PRICE EA
150SBS	1½" Female Thread Poly Basket	1	
200SBS	2" Female Thread Poly Basket	1	
300SBS	3" Female Thread Poly Basket	1	

COMPLETE PUMP WITH EFFICIENT INDUSTRIAL ELECTRIC MOTORS!

MOTOR FEATURES:

- Pressure cast aluminum end plates with ribbed design for rigidity.
- Ball bearings, locked drive end bearing.
- Heavy gauge steel frame.
- Motors wound with inverter spike resistance magnet wire.
- Mounted complete on heavy duty cast iron base plate.
- 230 V Motors.

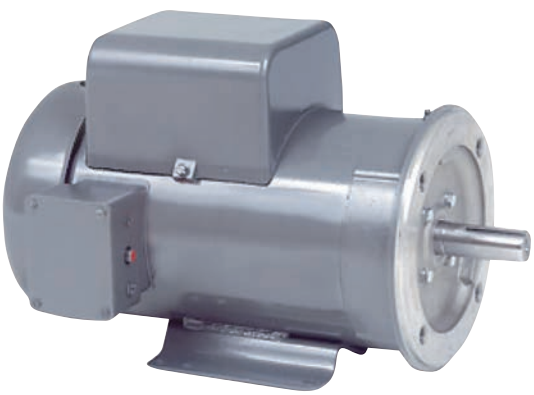

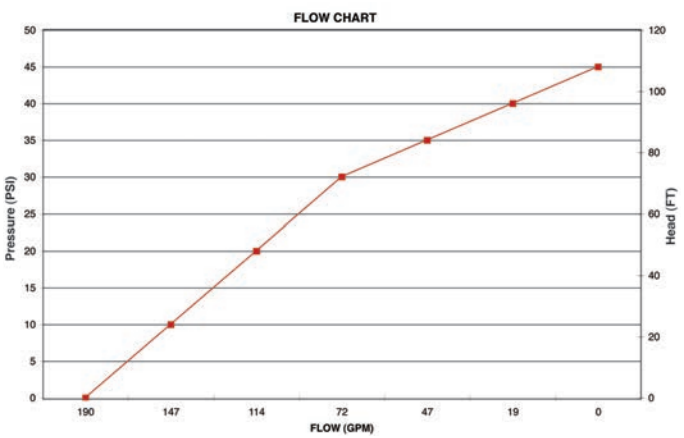

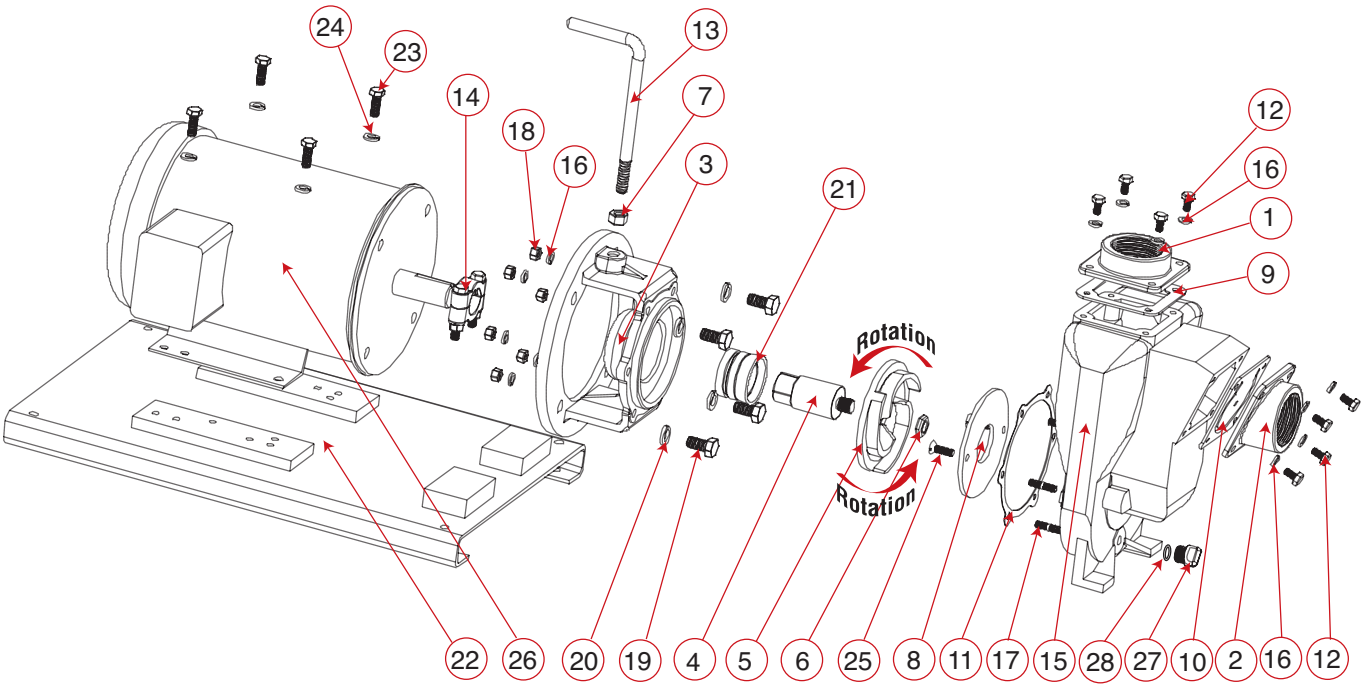

REPLACEMENT PARTS 234PIE3				
ITEM	PART NO	DESCRIPTION	QTY	PRICE EA
1	17000	Outlet Flange	1	
2	17002	Inlet Flange	1	
3	17046	C-Flange Adapter	1	
4	17007	Impeller Shaft	1	
5	17008	Impeller	1	
6	17009B	5/8" Impeller Nut	1	
7	17010	1/2" Hex Nut	1	
8	17011	Wear Plate	1	
9	17013	Outlet Gasket	1	
10	17016	Gasket & Check Valve	1	
11	17018	Gasket Adapter	1	
12	17019	Bolt	8	
13	15022	Handle	1	
14	17024	Clamp Assembly w/Key	1	
15	17026	Pump Housing	1	
16	V10118	5/16" Lock Washer	20	
17	17042	Housing Stud	6	
18	V10119	Hex Nut	8	
19	17449	Bolt	4	
20	18058	Washer	4	
21	17035	Seal Assembly	1	
22	17701	Base Plate Assembly	1	
23	17704	Bolt	4	
24	V20018	3/8" Lock Washer	4	
25	17130	5/16-18 x 1.00" FHSCS, 18-8 SS	2	
26	BEM3	Electric Motor	1	
27	12777	1/2" Plug	1	
28	UV15163	O-Ring for Drain Plug	1	

REPLACEMENT PARTS 234PIE5 & 234PIE51				
ITEM	PART NO	DESCRIPTION	QTY	PRICE EA
1	17000	Outlet Flange	1	
2	17002	Inlet Flange	1	
3	17446	C-Flange Adapter	1	
4	17406	Impeller Shaft	1	
5	17408	Impeller	1	
6	17009B	5/8" Impeller Nut	1	
7	17010	1/2" Hex Nut	1	
8	17011	Wear Plate	1	
9	17013	Outlet Gasket	1	
10	17016	Gasket & Check Valve	1	
11	17018	Gasket Adapter	1	
12	17019	Bolt	8	
13	15022	Handle	1	
14	18129	Clamp Assembly w/Key	1	
15	17026	Pump Housing	1	
16	V10118	5/16" Lock Washer	20	
17	17042	Housing Stud	6	
18	V10119	Hex Nut	8	
19	17449	Bolt	4	
20	18058	Washer	4	
21	18025	Seal Assembly	1	
22	17701	Base Plate Assembly	1	
23	17704	Bolt	4	
24	V20018	3/8" Lock Washer	4	
25	17130	5/16-18 x 1.00" FHSCS, 18-8 SS	2	
26	BEM5	Electric Motor	1	
26	BEM51	Electric Motor	1	
27	12777	1/2" Plug	1	
28	UV15163	O-Ring for Drain Plug	1	

1½" & 2" Cast Iron Pumps with Hydraulic Motors

PUMP FEATURES

- Rugged construction for dependable service.
- Carbon ceramic seal with stainless steel cup and spring with FKM (viton type) rubber.
- Replaceable inlet and outlet flanges.
- Dynamically balanced impeller.

HYDRAULIC MOTOR FEATURES

- Hydraulic fluid capacity
  Minimum 6 Gallons / Maximum 10 Gallons.
- 12 H.P. Motor.
- Open or closed system.
- Minimum 500 P.S.I. / Maximum 2000 P.S.I.

CAUTION-WARNING: Please do not run pumps dry, restrict or reduce port sizes or dead head pumps. This could cause component failure to pump.

DO NOT USE WITH FLAMMABLE LIQUIDS.

1½" CAST IRON HYDRAULIC PUMPS					
PART NO	DESCRIPTION	HP	QTY	INV	PRICE EA
150PIHY	1½" Cast Iron Pump w/12 HP Hydraulic Motor	12	1	MTO	

2" CAST IRON HYDRAULIC PUMPS					
PART NO	DESCRIPTION	HP	QTY	INV	PRICE EA
200PIHY	2" Cast Iron Pump w/12 HP Hydraulic Motor	12	1	MTO	
200PIHA	2" Cast Iron Pump Only without Motor	N/A	1	MTO	

SPOOL VALVE ASSEMBLY DIAGRAM

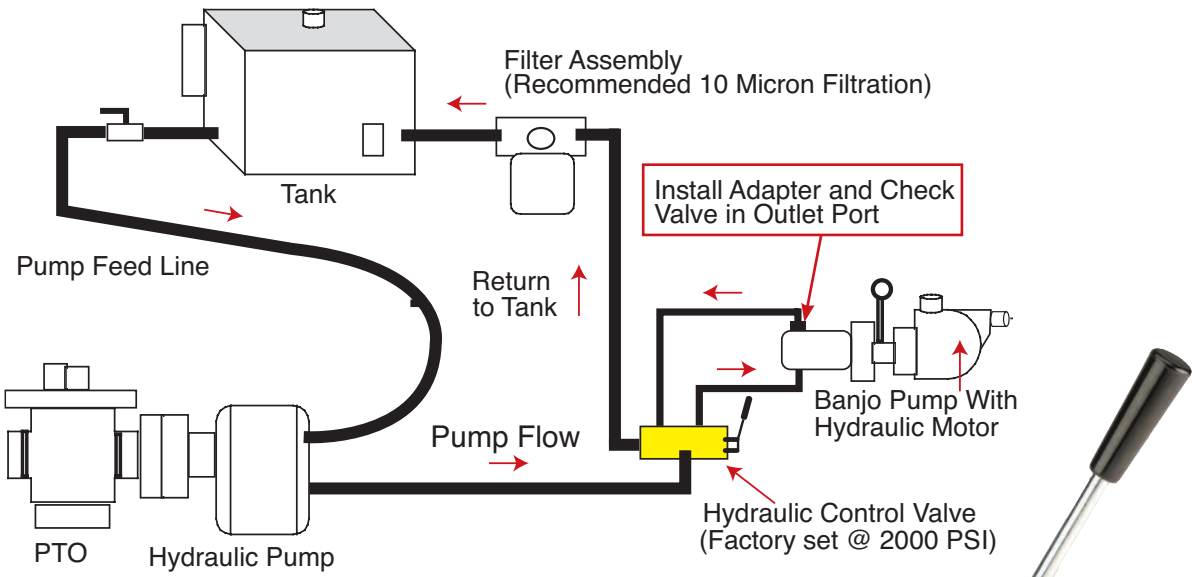

Recommendation:
We recommend using the motor spool control valve or a suitable equivalent. The lack of such a valve in this circuit may cause failure to the hydraulic motor.

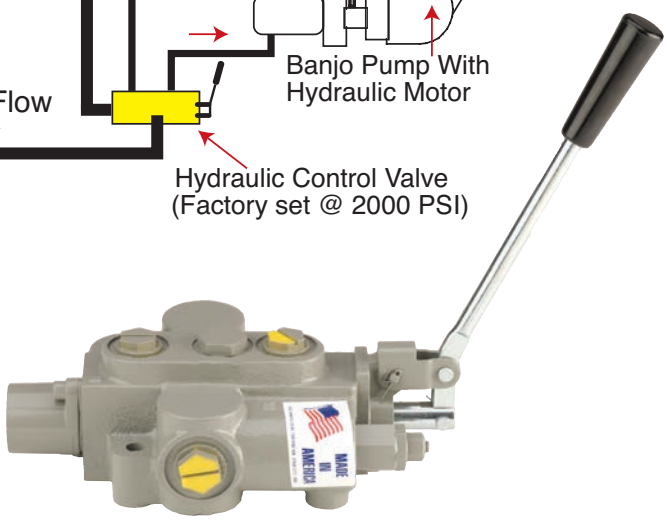

HYDRAULIC MOTOR SPOOL VALVE					
PART NO	DESCRIPTION	HP	QTY	INV	PRICE EA
HSV1000	Hydraulic Motor Spool Valve	N/A	1	MTO	

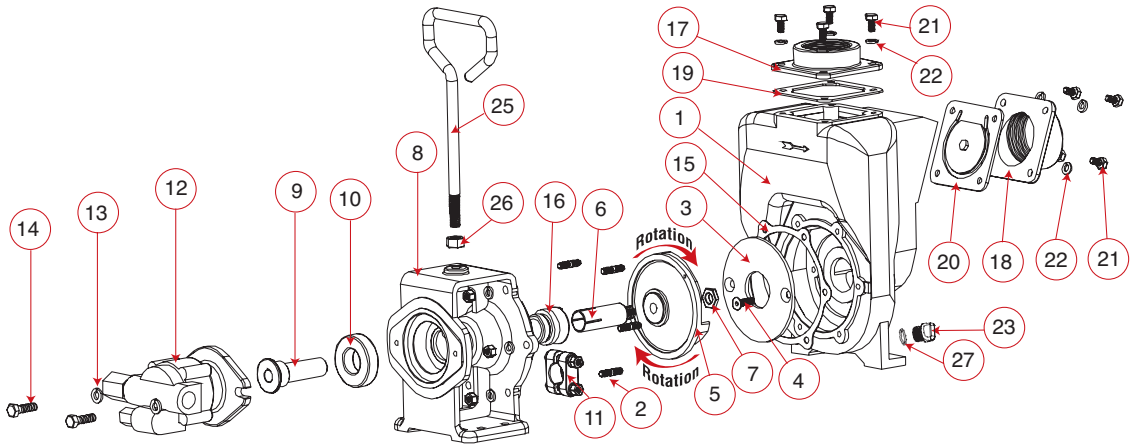

HYDRAULIC MOTOR DATA	
U.S. Gallons/Rev.	0.0025
Cubic Inches/Rev.	0.580
Liters/Rev.	0.0097
Max Hydraulic Pressure	2000 PSI
Min Hydraulic Pressure	200 PSI
Inlet Port	SAE 10 (7/8-14 UNF-2B)
Outlet Port	SAE 10 (7/8-14 UNF-2B)
Minimum GPM Required	6 GPM 2400 RPM
Maximum GPM Required	10 GPM 4000 RPM
Ideal GPM Required	9 GPM 3600 RPM
CONNECTION INFORMATION	
Inlet	"A" Port
Outlet	"B" Port
Supplied check valve is to ensure proper rotation of the Banjo pump. Place check valve in outlet port (marked "B") for proper right hand rotation.	
SPOOL VALVE INFORMATION	
Required Outlet Flow	Min 8 GPM / Max 13 GPM
Required System Pressure	Min 600 PSI / Max 3000 PSI

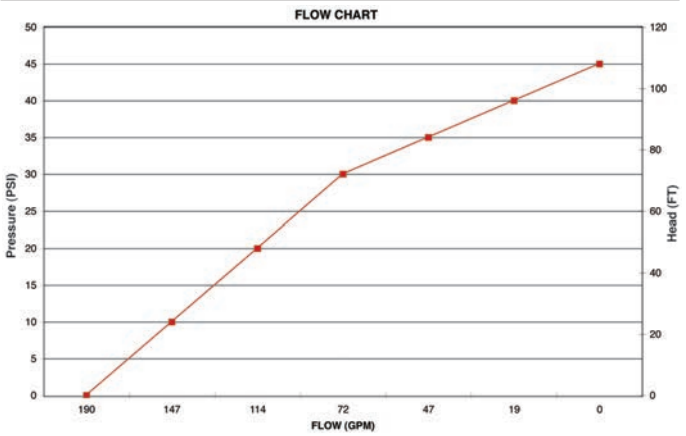

REPLACEMENT PARTS 1½" & 2" HYDRAULIC ADAPTER

ITEM	PART NO	DESCRIPTION	QTY	PRICE EA
1	17049A	Hydraulic Motor Adapter	1	
2	17018	Gasket Adapter	1	
3	17035	Seal Assembly	1	
N/S	17007	⅞" SS Shaft Sleeve	1	
N/S	12214A	Shim	1	
4	17056	SKF 6206-2RS1 Bearing	1	
5	17055A	Hydraulic Adapter Shaft	1	
6	HY1013	Gresen® Hydraulic Motor	1	
7	V20018	Lock Washer	2	
8	18010SS	Bolt	2	
9	17600A	Hydraulic Motor Conversion Assembly	1	
N/S	HY1003	Seal Kit	1	

REPLACEMENT PARTS 1½" & 2" CAST IRON PUMPS

ITEM	PART NO	DESCRIPTION	QTY	PRICE EA
1	17026	Pump Housing	1	
2	17042	Pump Housing Stud	6	
3	17011	Wear Plate	1	
4	17130	5/16-18 x 1.00" FHSCS, 18-8 SS	2	
5	17008	5" Impeller	1	
6	17007	⅞" Sleeve Drive for Hydraulic Motor	1	
7	17009B	⅝" Impeller Nut	1	
8	17049A	Hydraulic Adapter	1	
9	17055A	Hydraulic Adapter Shaft	1	
10	17056	SKF 6206-2RS1 Bearing	1	
11	17024	⅞" Clamp, no key	1	
12	HY1013	MGG@0025BC1D3 Hydraulic Motor Assembly	1	
13	V20018	⅜" Lock Washer	2	
14	18010SS	⅜"-16 x 1.25" HHHCS	2	
15	17018	Gasket Adapter	1	
16	17028	EPDM Seal Assembly	1	
16	17035	FKM (viton type) Seal Assembly	1	
16	17035SD	Severe Duty Seal Assembly	1	
17	17000	2" Outlet Flange	1	
17	17001	1½" Outlet Flange	1	
18	17002	2" Inlet Flange	1	
18	17003	1½" Inlet Flange	1	
19	17013	EPDM Gasket	1	
20	17016	Gasket Check Valve Assembly	1	
21	17019	5/16" -18 x 0.75" Cap Screw	8	
22	V10118	5/16" Split Lock Washer	14	
23	12777	½" Plug	1	
24	V10119	5/16"-18 Hex Nut	6	
25	15022	Handle	1	
26	17010	½" Hex Nut - 13UNF-RH	1	
27	UV15163	O-Ring	1	

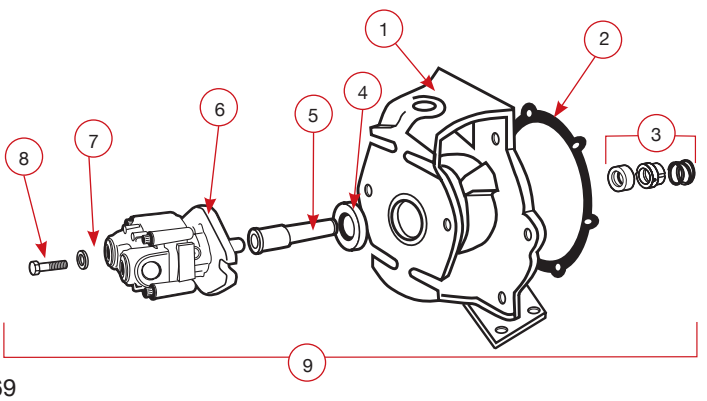

2" 222 Series Cast Iron Pumps

PUMP FEATURES

- Cast iron construction for rugged dependable service.
- Carbon ceramic seal with stainless steel cup and spring with FKM (viton type) rubber.
- Replaceable inlet and outlet flanges.
- Dynamically balanced impeller.
- Pump end separated from engine.
- Heavy duty slinger seal on motor shaft.
- Large weep holes between pump end and engine.
- "V" Shaped for quicker priming.

CAUTION-WARNING: Please do not run pump dry, restrict or reduce port sizes, or dead head pump. This could cause component failure to pump.

DO NOT USE WITH FLAMMABLE LIQUIDS.

NOTE: Engine warranty service available at authorized Briggs & Stratton and Honda dealers.

***SHIPPING**: Truck shipments only.

222 SERIES CAST IRON PUMPS W/GAS ENGINES					
PART NO	DESCRIPTION	HP	QTY	INV	PRICE EA
222PIH5	2" Cast Iron Pump w/5.5 HP Honda® Engine	5.5	1	STK	
222PIH6	2" Cast Iron Pump w/6.5 HP Honda® Engine	6.5	1	STK	
222PIH5E	2" Cast Iron Pump w/5.5 HP Honda® Engine w/ Electric Start	5.5	1	MTO	
222PI6PRO	2" Cast Iron Pump w/6.5 HP Briggs & Stratton® Engine Pro Series	6.5	1	STK	

222 CAST IRON BEARING PEDESTAL FOR ELECTRIC MOTORS					
PART NO	DESCRIPTION	HP	QTY	INV	PRICE EA
222PBI	2" Cast Iron Bearing Pedestal w/ ¾" Shaft Straight Keyed	N/A	1	MTO	

* Recommended for use with 5 h.p. electric motor @ 3600 RPM.

222 CAST IRON PUMP ONLYS FOR GAS ENGINES					
PART NO	DESCRIPTION	HP	QTY	INV	PRICE EA
222POI	2" Cast Iron Pump Only w/ Full Impeller	N/A	1	MTO	
225POI*	2" Cast Iron Pump Only w/ Trimmed Impeller	N/A	1	STK	

* 225POI Recommended for use with 10 pound per gallon material or more.

222 CAST IRON HYDRAULIC PUMPS					
PART NO	DESCRIPTION	HP	QTY	INV	PRICE EA
222PIHY	2" Cast Iron Pump w/12 HP Hydraulic Motor	12	1	MTO	

Please see page 168 for spool valve & diagram.

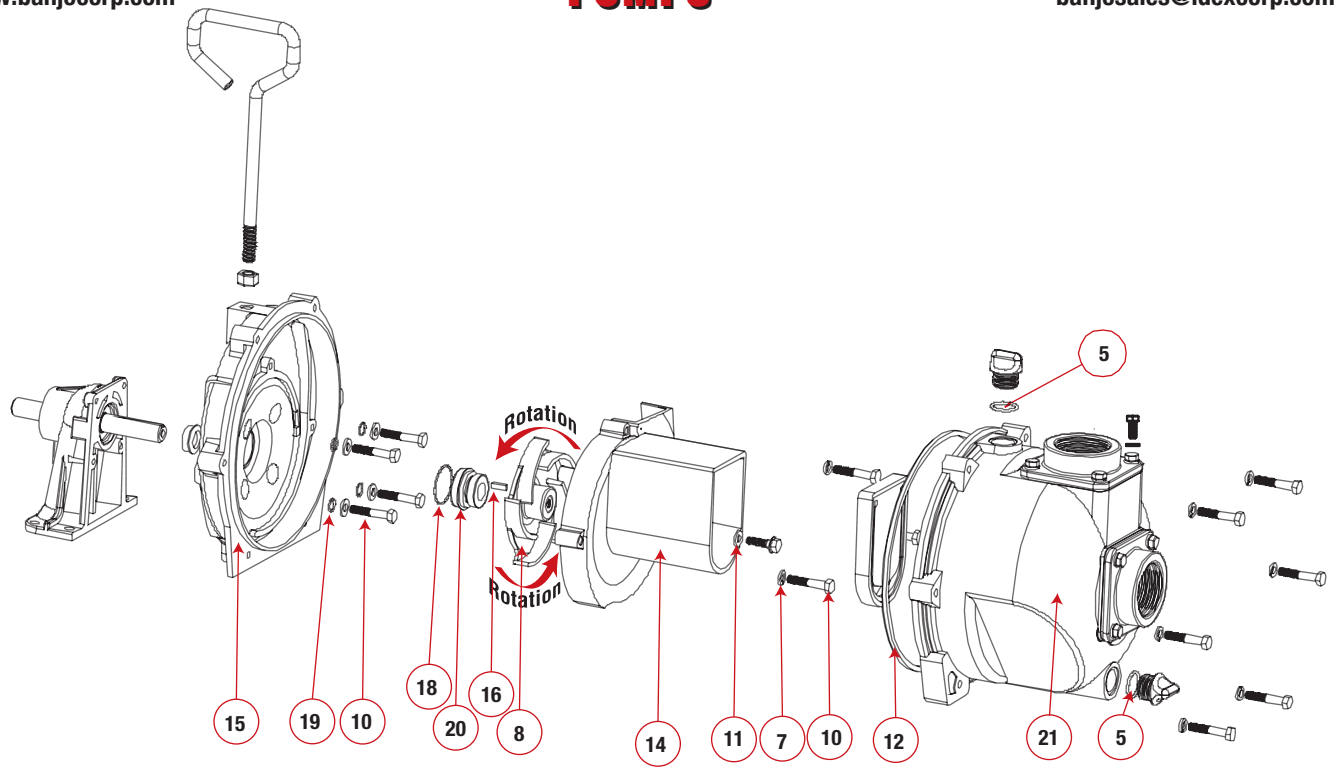

REPLACEMENT PARTS 222 CAST IRON PUMPS W/GAS ENGINES				
ITEM	PART NO	DESCRIPTION	QTY	PRICE EA
14	15702	Volute	1	
15	15703	Rear Bracket	1	
21	15712	Body	1	
N/S	12099	7/16"-14 x 1.25" HHCS	1	
N/S	15751	Bracket Shim	1	
N/S	15752	Impeller Shim	1	
N/S	15000	Repair Kit (Items 5, 8,11-12, 18-20, 12099, 15751 & 15752)	1	
N/S	15000V	FKM (viton type) Repair Kit	1	
N/S	15999	Seal Kit (Items 5, 11-12, 18-20, 12099, 15751 & 15752)	1	
N/S	15999V	FKM (viton type) Seal Kit	1	

KITS 222 CAST IRON PUMPS W/GAS ENGINES								
PART NO	REPAIR KIT NO	PRICE EA	FKM(viton type) REPAIR KIT NO	PRICE EA	SEAL KIT NO	PRICE EA	FKM(viton type) SEAL KIT NO	PRICE EA
222PIH5	15000		15000V		15999		15999V	
222PIH6	15000		15000V		15999		15999V	
222PIH5E	15000		15000V		15999		15999V	
222PI6PRO	15000		15000V		15999		15999V	
222POI	15000		15000V		15999		15999V	
225POI	15000		15000V		15999		15999V	
222PBI	15000		15000V		15999		15999V	
222PIHY	15000		15000V		15999		15999V	

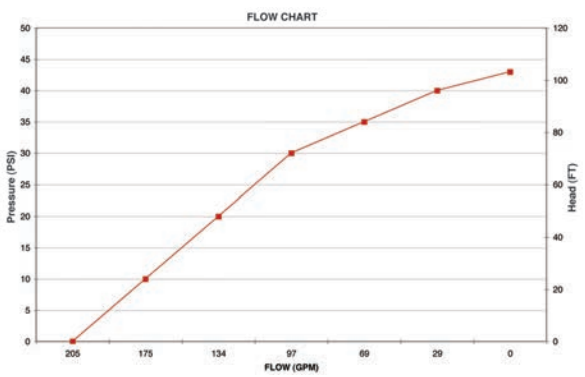

NOTE: EPDM gaskets, seals and o-rings used in the following assemblies unless otherwise noted: 222PBI, 222PIHY, 222PI5, 222PIH5, 222POI. Pumps equipped with FKM (viton type) also available.

2" 222 Series Cast Iron Pumps with Electric Motors

FEATURES

- Cast iron construction for rugged dependable service.
- Stainless steel shaft sleeve to protect engine shaft.
- Carbon ceramic seal with stainless steel cup and spring with FKM (viton type) rubber.
- Replaceable inlet and outlet flanges.
- Dynamically balanced impeller.
- Pump end separated from engine.
- Heavy duty slinger seal on motor shaft.
- Large weep holes between pump end and engine.
- "V" shaped for quicker priming.

CAUTION-WARNING: Please do not run pumps dry, restrict or reduce port sizes or dead head pumps. This could cause component failure to pump. No Flammables.

DO NOT USE WITH FLAMMABLE LIQUIDS.

***SHIPPING**: Truck shipments only.

222 SERIES CAST IRON PUMPS W/ELECTRIC MOTORS					
PART NO	DESCRIPTION	HP	QTY	INV	PRICE EA
222PIE5	2" Cast Iron Pump w/5.0 HP Three Phase Electric Motor	5.0	1	MTO	
222PIE51	2" Cast Iron Pump w/5.0 HP Single Phase Electric Motor	5.0	1	MTO	

COMPLETE PUMP WITH EFFICIENT INDUSTRIAL ELECTRIC MOTORS!

POLYETHYLENE SUCTION BASKET STRAINER			
PART NO	DESCRIPTION	QTY	PRICE EA
150SBS	1½" Female Thread Poly Basket	1	
200SBS	2" Female Thread Poly Basket	1	
300SBS	3" Female Thread Poly Basket	1	

MOTOR FEATURES:

- Pressure cast aluminum end plates with ribbed design for rigidity.
- Ball bearings, locked drive end bearing.
- Heavy gauge steel frame.
- Motors wound with inverter spike resistance magnet wire.
- Mounted complete on heavy duty cast iron base plate.
- 230 V Motors.

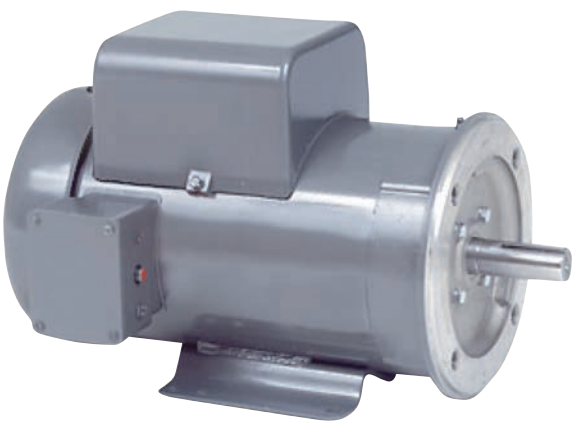

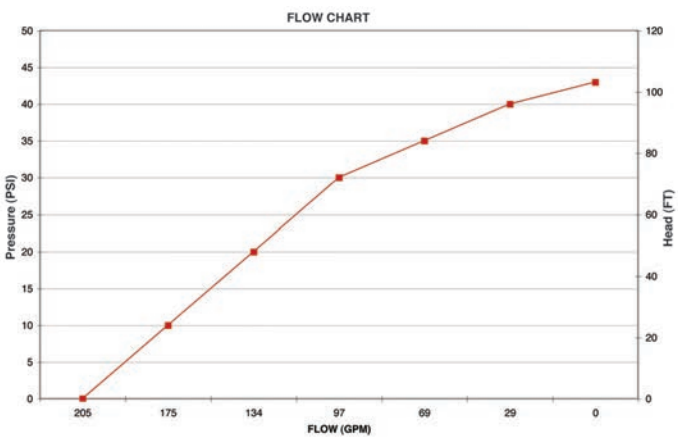

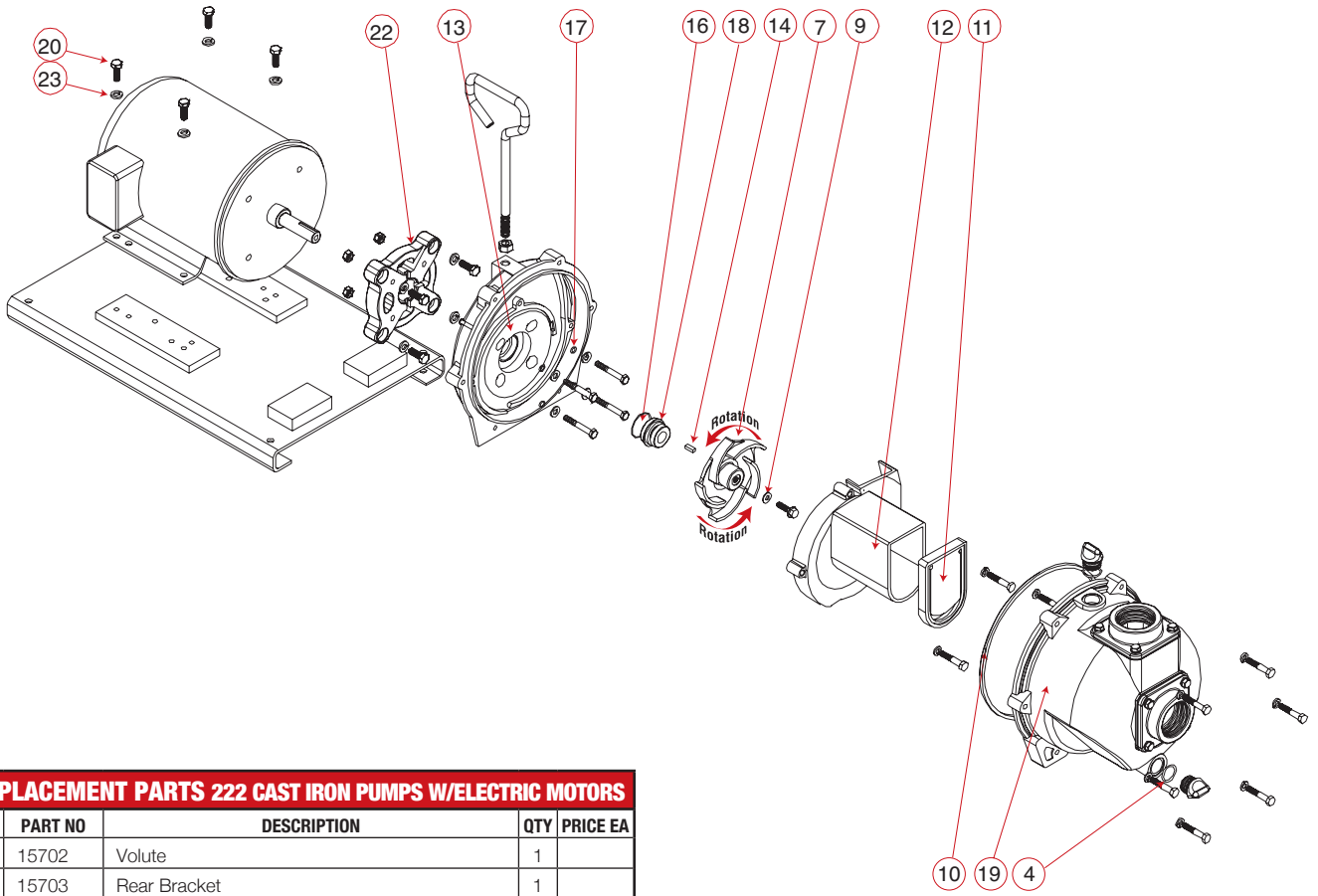

REPLACEMENT PARTS 222 CAST IRON PUMPS W/ELECTRIC MOTORS				
ITEM	PART NO	DESCRIPTION	QTY	PRICE EA
12	15702	Volute	1	
13	15703	Rear Bracket	1	
19	15712	Body	1	
N/S	12099	7/16"-14 x 1.25" HHCS	1	
N/S	15751	Bracket Shim	1	
N/S	15752	Impeller Shim	1	
N/S	15000	Repair Kit (Items 4,7,9-11,14,16-18,12099,15751&15752)	1	
N/S	15000V	FKM (viton type) Repair Kit	1	
N/S	15999	Seal Kit (Items 4, 9-11, 14,16-18,12099,15751&15752)	1	
N/S	15999V	FKM (viton type) Seal Kit	1	
N/S	12756	Adapter Kit (Items 14, 20, 22, 23,12052,12053,15751,15752, 17029)	1	

KITS 222 CAST IRON PUMPS W/ELECTRIC MOTORS										
PART NO	EPDM REPAIR KIT NO	PRICE EA	FKM(viton type) REPAIR KIT NO	PRICE EA	EPDM SEAL KIT NO	PRICE EA	FKM(viton type) SEAL KIT NO	PRICE EA	ADAPTER KIT	PRICE EA
222PIE5	15000		15000V		15999		15999V		12756	
222PIE51	15000		15000V		15999		15999V		12756	

2" M222 Series Cast Iron Manifold Wet Seal Pumps

FEATURES

- Durable cast iron construction.
- Dynamically balanced impeller.
- Carbon ceramic seal with stainless steel cup and spring with FKM (viton type) rubber.
- Pump end separated from engine.
- Large weep holes between pump end and engine or motor.
- "V" Shaped for quicker priming.

DO NOT USE WITH FLAMMABLE LIQUIDS.

NOTE: Engine warranty service available at authorized Briggs & Stratton and Honda dealers.

***SHIPPING**: Truck shipments only.

2" MANIFOLD WET SEAL CI PUMPS W/GAS ENGINES					
PART NO	DESCRIPTION	HP	QTY	INV	PRICE EA
M222PI6PROW	2" Manifold Cast Iron Wet Seal Pump w/ 6.5 HP Briggs & Stratton® Pro Series Engine	6.5	1	MTO	
M222PIH6W	2" Manifold Cast Iron Wet Seal Pump w/ 6.5 HP Honda® Engine	6.5	1	MTO	

2" MANIFOLD WET SEAL CI PUMPS W/ELECTRIC MOTORS					
PART NO	DESCRIPTION	HP	QTY	INV	PRICE EA
M222PIE5W	2" Manifold Cast Iron Wet Seal Pump w/ 5 HP Three Phase Electric Motor	5	1	MTO	
M222PIE51W	2" Manifold Cast Iron Wet Seal Pump w/ 5 HP Single Phase Electric Motor	5	1	MTO	

2" MANIFOLD WET SEAL CI PUMPS W/BEARING PEDESTAL					
PART NO	DESCRIPTION	HP	QTY	INV	PRICE EA
M222PBIW	2" Manifold Cast Iron Wet Seal Pump w/ Bearing Pedestal w/ ¾ Shaft	N/A	1	MTO	

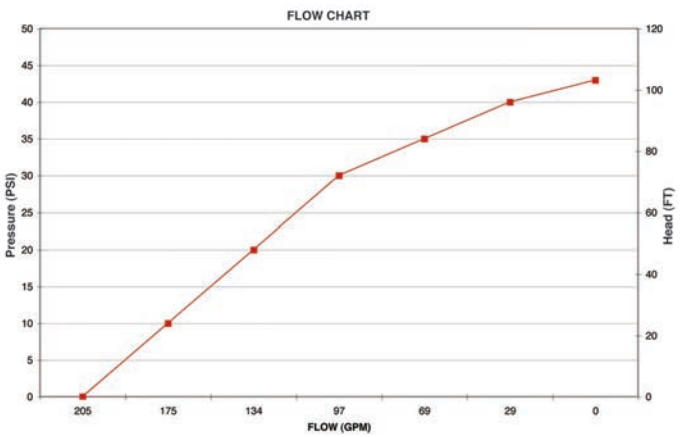

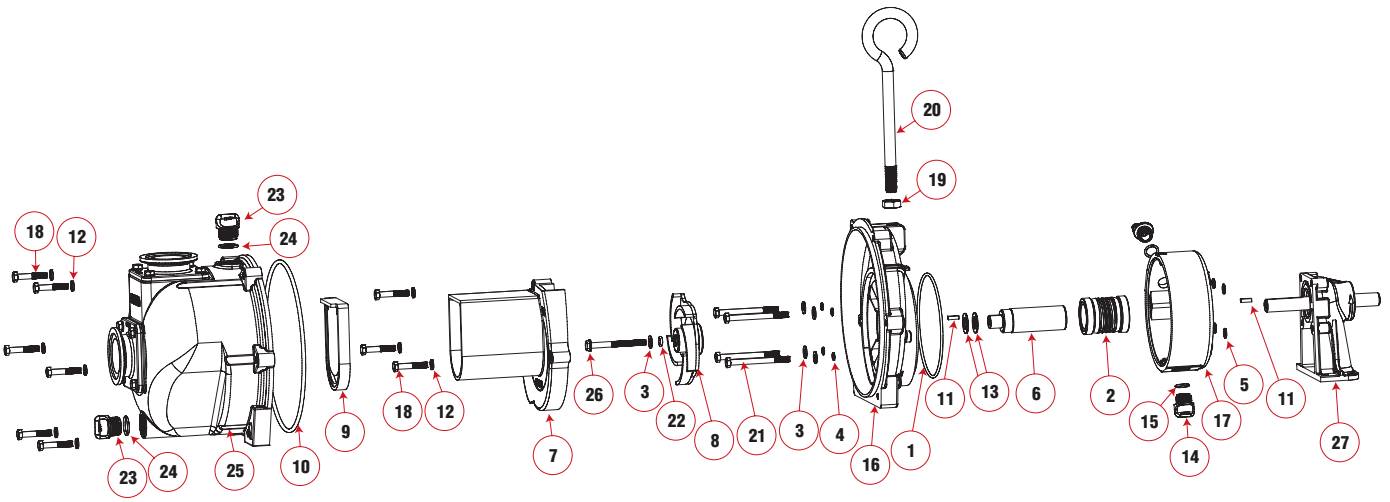

REPLACEMENT PARTS M222 WET SEAL CAST IRON PUMPS				
ITEM	PART NO	DESCRIPTION	QTY	PRICE EA
1	13719	O-Ring	1	
2	15035E	EPDM Mechanical Seal Assembly	1	
3	12901	5/16" Flat Washer	4	
4	12717	O-Ring for Bracket Screw	4	
5	12709	O-Ring	4	
6	15055	Adapter Shaft	1	
7	15702	Volute	1	
8	15772	5 Vane Impeller	1	
9	12705	Check Valve	1	
10	12719A	Body O-Ring	1	
11	12902A	Impeller Key	2	
12	V10118	5/16" Lock Washer	9	
13	CV10175	Gasket	2	
14	12777	½" Plug	2	

REPLACEMENT PARTS M222 WET SEAL CAST IRON PUMPS				
ITEM	PART NO	DESCRIPTION	QTY	PRICE EA
15	UV15163	O-Ring	2	
16	15703W	Rear Bracket	1	
17	15201W	Wet Seal Reservoir	1	
18	12715A	5/16"- 24 x 1¾" HHCS	9	
19	18034	⅝"-11 Jam Nut	1	
20	18033	Pump Handle	1	
21	V10117	5/16" - 18 x 3½" HFS	4	
22	A203V	O-Ring	1	
23	13777	¾" Plug	2	
24	13778	O-Ring	2	
25	M15712	Pump Body	1	
26	12766	5/16" - 24 x 3¼" HFS	1	
27	12882A	Bearing Pedestal	1	

NOTE: Prices listed are suggested retail price only. Please contact your local distributor for pricing.

2" M222 Series Cast Iron Manifold Wet Seal Pumps with Hydraulic Motors

FEATURES

- Durable cast iron construction.
- Dynamically balanced impeller.
- Carbon ceramic seal with stainless steel cup and spring with FKM (viton type) rubber.
- Pump end separated from engine.
- Large weep holes between pump end and motor.
- "V" Shaped for quicker priming.

DO NOT USE WITH FLAMMABLE LIQUIDS.

2" MANIFOLD WET SEAL CI HYDRAULIC PUMP					
PART NO	DESCRIPTION	HP	QTY	INV	PRICE EA
M222PIHYW	2" Manifold Cast Iron Wet Seal Pump w/12 HP Hydraulic Motor	12	1	MTO	

SPOOL VALVE ASSEMBLY DIAGRAM

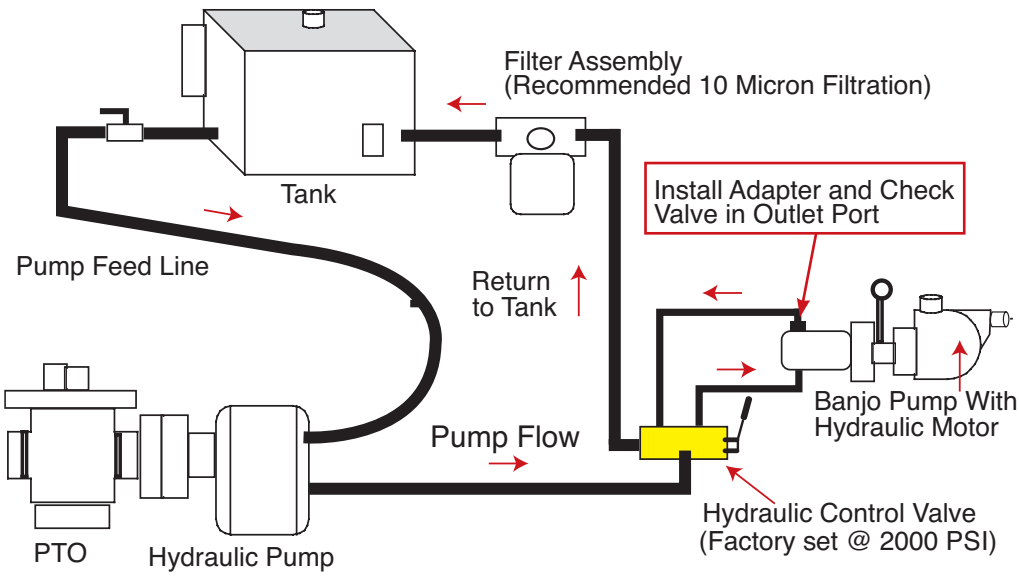

Recommendation:
We recommend using the motor spool control valve or a suitable equivalent. The lack of such a valve in this circuit may cause failure to the hydraulic motor.

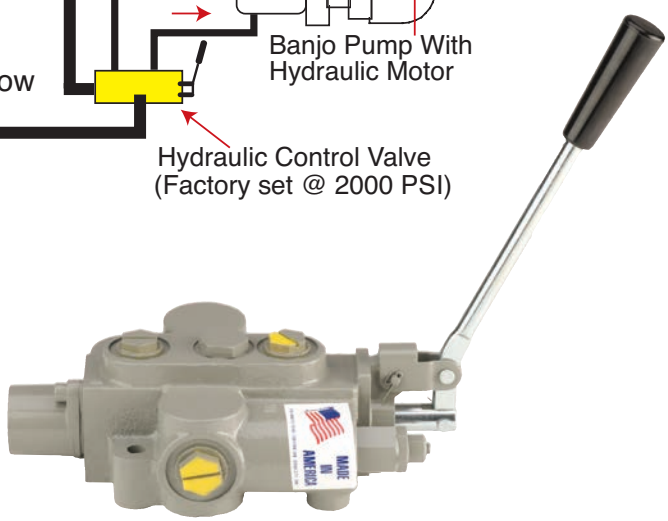

HYDRAULIC MOTOR SPOOL VALVE					
PART NO	DESCRIPTION	HP	QTY	INV	PRICE EA
HSV1000	Hydraulic Motor Spool Valve	N/A	1	MTO	

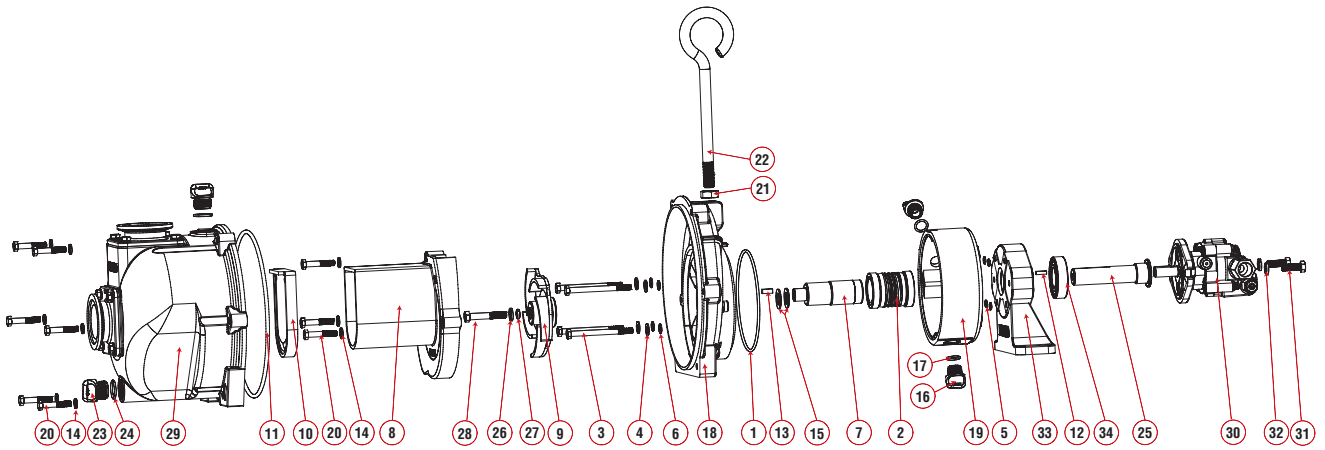

HYDRAULIC MOTOR DATA	
U.S. Gallons/Rev.	0.0025
Cubic Inches/Rev.	0.580
Liters/Rev.	0.0097
Max Hydraulic Pressure	2000 PSI
Min Hydraulic Pressure	200 PSI
Inlet Port	SAE 10 (7/8-14 UNF-2B)
Outlet Port	SAE 10 (7/8-14 UNF-2B)
Minimum GPM Required	6 GPM 2400 RPM
Maximum GPM Required	10 GPM 4000 RPM
Ideal GPM Required	9 GPM 3600 RPM
CONNECTION INFORMATION	
Inlet	"A" Port
Outlet	"B" Port
Supplied check valve is to ensure proper rotation of the Banjo pump. Place check valve in outlet port (marked "B") for proper right hand rotation.	
SPOOL VALVE INFORMATION	
Required Outlet Flow	Min 8 GPM / Max 13 GPM
Required System Pressure	Min 600 PSI / Max 3000 PSI

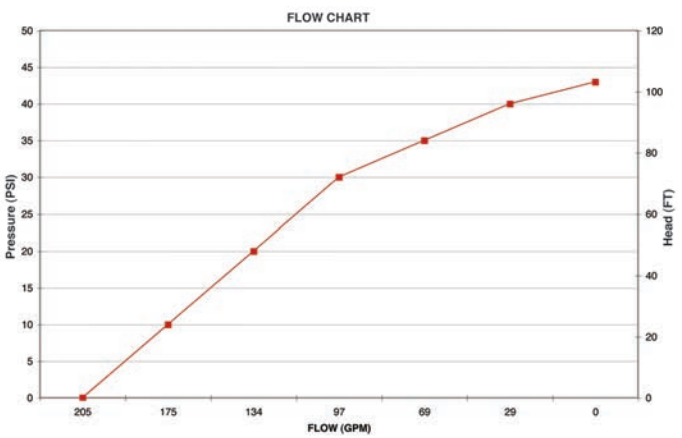

REPLACEMENT PARTS M222 WET SEAL HYRAULIC PUMP

ITEM	PART NO	DESCRIPTION	QTY	PRICE EA
1	13719	O-Ring	1	
2	15035E	EPDM Mechanical Seal Assembly	1	
3	12034	5/16" -24 x 3 3/4" HHCS	4	
4	12901	SS Rear Bracket Washer	4	
5	12717	O-Ring for Screw Head	4	
6	12709	O-Ring	4	
7	13055	Adapter Shaft	1	
8	15702	Volute	1	
9	15772	5 Vane Impeller	1	
10	12705	Check Valve	1	
11	12719A	Body O-Ring	1	
12	12902A	Impeller Key	1	
13	16901	1/4" SQ. 3/4" Key Stock	1	
14	V10118	5/16" SS Lock Washer	9	
15	CV10175	Gasket	2	
16	12777	1/2" Plug	2	
17	UV15163	Prime/Drain Plug O-Ring	2	
18	15703W	Rear Bracket	1	
19	15201W	Wet Seal Reservoir	1	
20	12715A	SS Bracket Screws	9	
21	18034	5/8" SS Jam Nut	1	
22	18033	Handle	1	
23	13777	3/4" Plug	2	
24	13778	O-Ring	2	
25	12055E	Hydraulic Motor Adapter Shaft	1	
26	19766	3/8" Flat Washer	1	
27	A203V	O-Ring	1	
28	BF207	3/8" - 16 x 2 1/4" HHCS	1	
29	M15712	Pump Body	1	
30	HY1013	Gresen® Hydraulic Motor	1	
31	18010SS	Bolt	2	
32	V20018	Lock Washer	2	
33	12049E	Hydraulic Pedestal Housing	1	
34	17056E	Bearing	1	

3" Cast Iron Pumps with Gas Engines

FEATURES

- Cast iron construction for rugged dependable service.
- Stainless steel shaft sleeve to protect engine shaft.
- Carbon ceramic seal with stainless steel cup and spring with FKM (viton type) rubber.
- Replaceable inlet and outlet flanges.
- Dynamically balanced impeller.

CAUTION-WARNING: Please do not run pumps dry, restrict or reduce port sizes or dead head pumps. This could cause component failure to pump.

DO NOT USE WITH FLAMMABLE LIQUIDS.

NOTE: Engine warranty service available at authorized Briggs & Stratton and Honda dealers.

***SHIPPING**: Truck shipments only.

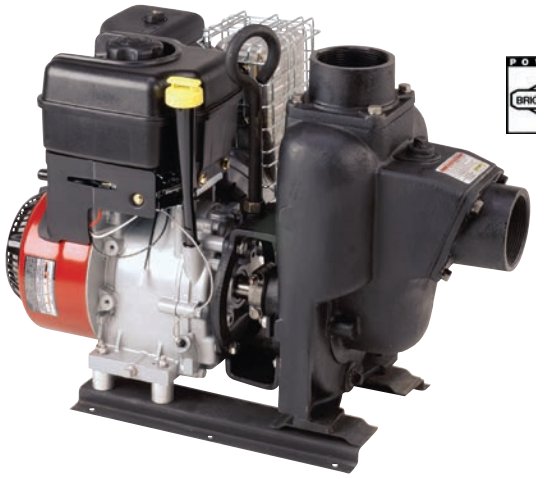

POWERED BY BRIGGS & STRATTON

3" CAST IRON PUMPS W/GAS ENGINES					
PART NO	DESCRIPTION	HP	QTY	INV	PRICE EA
300PIH-8	3" Cast Iron Pump w/8 HP Honda® Engine w/Electric Start & Pull Rope	8	1	MTO	
300PI11PRO	3" Cast Iron Pump w/11 HP Briggs & Stratton® Engine Pro Series w/Electric Start & Pull Rope	11	1	MTO	
300PIH-11	3" Cast Iron Pump w/11 HP Honda® Engine w/Electric Start & Pull Rope	11	1	MTO	
300PIH13	3" Cast Iron Pump w/13 HP Honda® Engine w/Electric Start & Pull Rope	13	1	MTO	

3" CAST IRON PUMP ONLY					
PART NO	DESCRIPTION	HP	QTY	INV	PRICE EA
300POI	3" Cast Iron Pump Only for 1" Shaft	N/A	1	STK	

3" CAST IRON BEARING PEDESTAL					
PART NO	DESCRIPTION	HP	QTY	INV	PRICE EA
300PBI	3" Cast Iron Bearing Pedestal w/1" Shaft	N/A	1	MTO	

3" CAST IRON C-FLANGE PUMPS					
PART NO	DESCRIPTION	HP	QTY	INV	PRICE EA
300POICF*	3" Cast Iron C-Flange Pump w/1⅛" Shaft Sleeve*	N/A	1	MTO	

Note: * Recommend: 7½ HP, 3450 RPM, 184TC Frame Size for close coupling to electric motors.

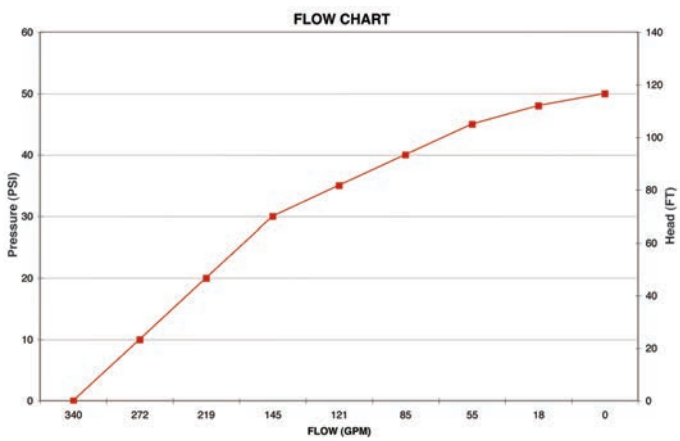

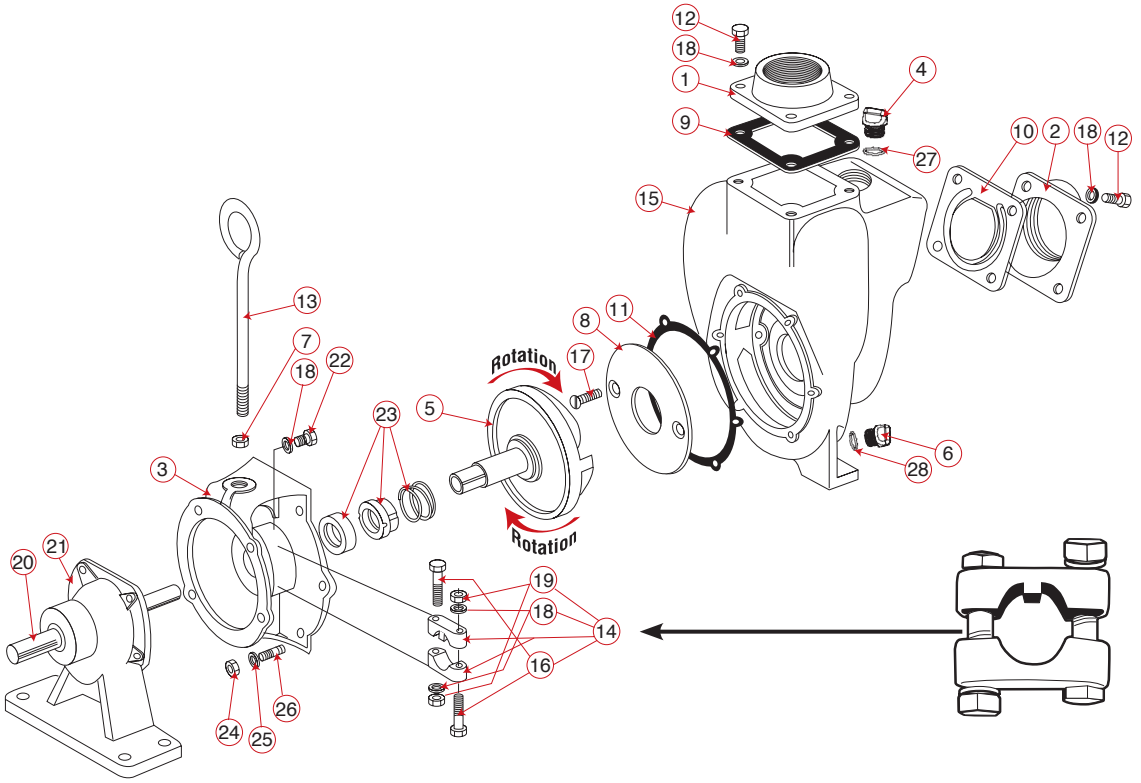

REPLACEMENT PARTS 3" CAST IRON PUMPS				
ITEM	PART NO	DESCRIPTION	QTY	PRICE EA
1	18008	NPT Outlet Flange	1	
1	M18008	3" Manifold Outlet Flange	1	
2	18012	NPT Inlet Flange	1	
2	M18012	3" Manifold Inlet Flange	1	
3	18026	Adapter for Gas Engine & Bearing Pedestal	1	
3	18048	C-Flange Adapter	1	
3	18049	Hydraulic Motor Adapter	1	
N/S	18055	Hydraulic Adapter Shaft	1	
4	13777	¾" Plug	1	
5	18023*	1" Impeller & Drive Shaft for Gas Engine	1	
5	18023-1.125	1⅛" Impeller & Drive Shaft for Electric Motor	1	
6	12777	½" Plug	1	
7	18034	⅝" SS Jam Nut	1	
8	18004	Wear Plate	1	
9	18009	EPDM Outlet Gasket	1	
10	18013	Gasket Check Valve Assembly	1	
11	18021	Adapter Gasket	1	
12	18010SS	⅜" - 16 x 1⅛" SS Cap Screw HXHD	8	
13	18033	Handle	1	

REPLACEMENT PARTS 3" CAST IRON PUMPS				
ITEM	PART NO	DESCRIPTION	QTY	PRICE EA
14	18029	Clamp Assembly (Old Style)	1	
14	18129	Clamp Assembly (New Style)	1	
15	18001	Pump Housing	1	
16	18030	⅜" -24 x 2¼" Bolt	2	
17	18106	Wear Plate Flat Head Screw	2	
18	V20018	⅜" Lock Washer	8	
19	18032	⅜" x 24 SS Hex Nut	2	
20	18504	1" Shaft	1	
21	18500	Bearing Pedestal	1	
N/S	18502	Bearing SKF 66306-2RS1/C3	2	
22	17704	Bolt	4	
23	18025*	FKM (viton type) Seal Assembly	1	
23	18025SD	Severe Duty Seal	1	
24	V20019	⅜" 16 SS Hex Nut	6	
25	V20018	⅜" SS Lock Washer	6	
26	18218	⅜" -16 x 24 x 2⅛" SS Stud	6	
27	13778	O-Ring	1	
28	UV15163	O-Ring	1	
N/S	18035	Z-Rail Mounting Bracket (Pair)	1	
N/S	18100	Repair Kit (Consist of items 5*, 8,11,17, 23*)	1	

UNIVERSAL BASE PLATE ASSEMBLY			
PART NO	DESCRIPTION	QTY	PRICE EA
18700	Base Plate Assembly for 1½", 2" & 3" Cast Iron or Poly Pump (Plate, Coupling Guard, Bolt Bag & Shims)	1	
18702	Replacement Coupling Guard	1	

POLYETHYLENE SUCTION BASKET STRAINER			
PART NO	DESCRIPTION	QTY	PRICE EA
150SBS	1½" Female Thread Poly Basket	1	
200SBS	2" Female Thread Poly Basket	1	
300SBS	3" Female Thread Poly Basket	1	

3" Cast Iron Wet Seal Pumps

FEATURES

- New compact design!
- Run Dry Capability!
- Durable cast iron construction.
- Dynamically balanced impeller.
- Replaceable inlet & outlet flanges.
- Graphite loaded silicon carbide seal with stainless steel cup and spring with FKM (viton type) rubber.
- Pump end separated from engine.
- Double seal contained in ethylene glycol reservoir.
- 350 gallons per minute.
- 63 P.S.I. maximum pressure.

Run Dry Capability!

Seal reservoir
Double Seals!

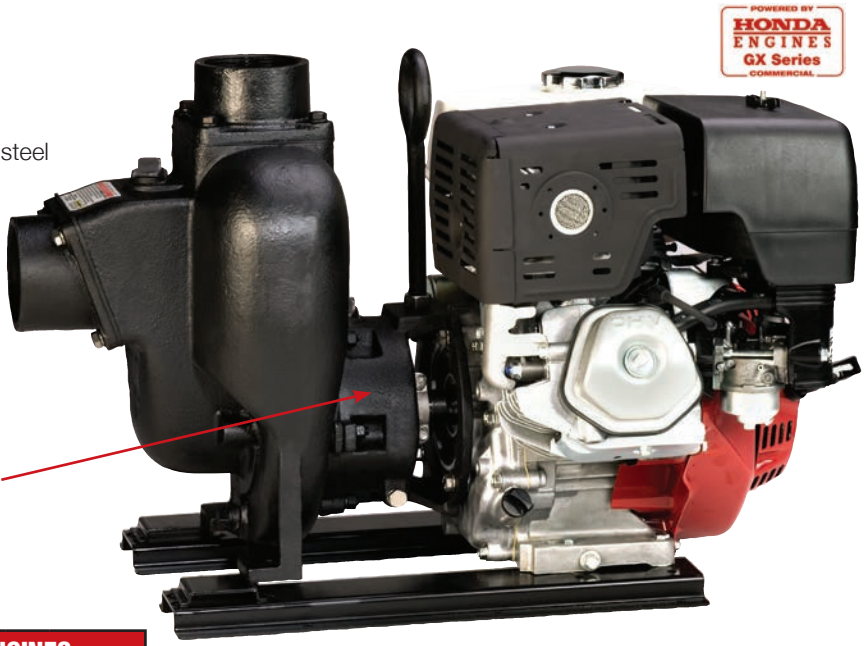

3" CAST IRON WET SEAL PUMPS W/GAS ENGINES					
PART NO	DESCRIPTION	HP	QTY	INV	PRICE EA
301PIH13W	3" Cast Iron Wet Seal Pump w/13 HP Honda® Engine w/ Electric Start & Pull Rope	13	1	STK	

DO NOT USE WITH FLAMMABLE LIQUIDS.

NOTE: Engine warranty service available at authorized Briggs & Stratton and Honda dealers.

***SHIPPING**: Truck shipments only.

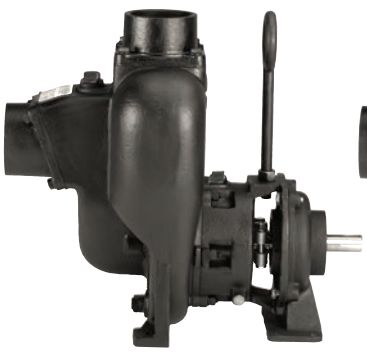

Bearing Pedestal
1" shaft for electric motors

Pump Only
for gas engine

3" CAST IRON WET SEAL BEARING PEDESTALS					
PART NO	DESCRIPTION	HP	QTY	INV	PRICE EA
301PBIW	3" Cast Iron Wet Seal Pump w/Bearing Pedestal	N/A	1	MTO	

3" CAST IRON WET SEAL PUMP ONLYS					
PART NO	DESCRIPTION	HP	QTY	INV	PRICE EA
301POIW	3" Cast Iron Wet Seal Pump Only	N/A	1	MTO	

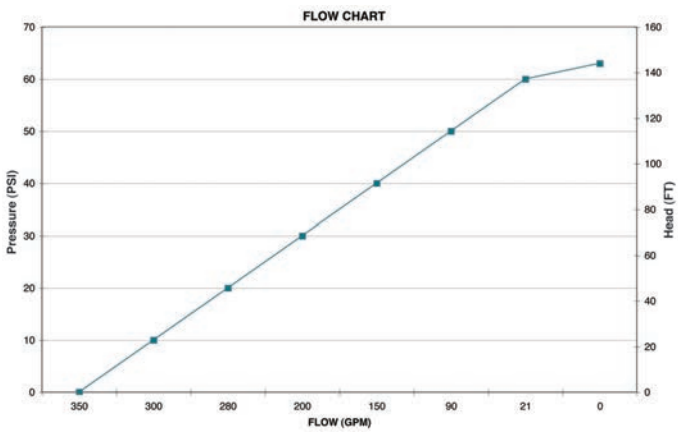

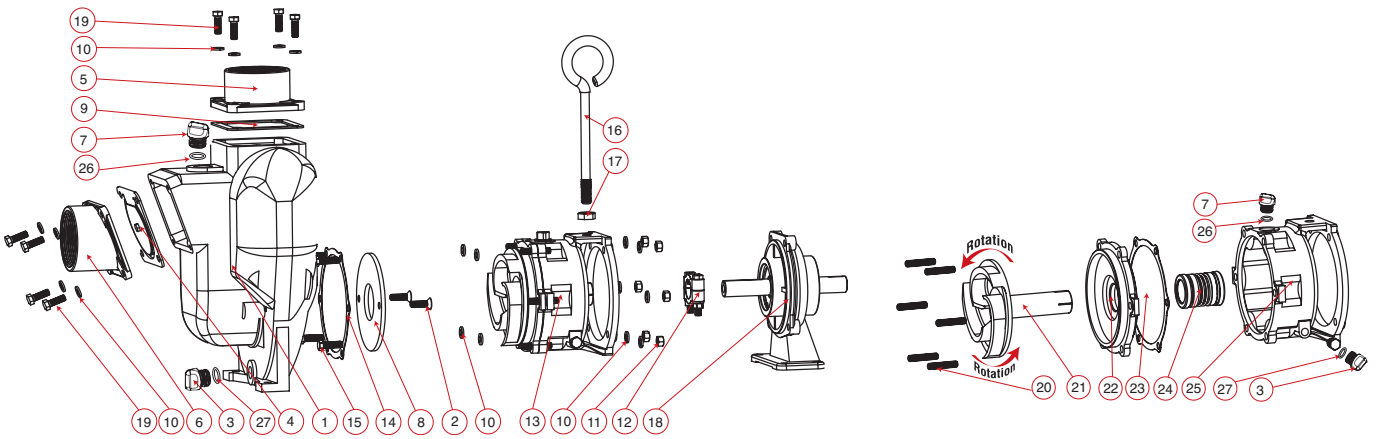

REPLACEMENT PARTS 3" CAST IRON WET SEAL PUMPS				
ITEM	PART NO	DESCRIPTION	QTY	PRICE EA
1	18001	Pump Housing	1	
2	18106	Flat Head Socket Cap Screw	2	
3	12777	½" Plug	2	
4	18013	Inlet/Check EPDM Gasket	1	
5	18008	NPT Outlet Flange	1	
6	18012	NPT Inlet Flange	1	
7	13777	¾" Plug	2	
8	18004	Wear Plate	1	
9	18009	EPDM Outlet Gasket	1	
10	V20018	⅜" Lock Washer	18	
11	V20019	⅜" 16 SS Hex Nut	6	
12	18129	Clamp Assembly Keyed	1	
13	18200A	Wet Seal Assembly	1	
14	18021	Adapter Gasket	1	

REPLACEMENT PARTS 3" CAST IRON WET SEAL PUMPS				
ITEM	PART NO	DESCRIPTION	QTY	PRICE EA
15	17704	⅜" -16 x 1¼" HHCS	4	
16	18033	Handle	1	
17	18034	⅝" -11 Jam Nut	1	
18	18500	Bearing Pedestal	1	
19	18010SS	⅜" - 16 x 1⅛" HHCS	8	
20	18218	⅜" -16 x 24 x 2⅛" SS Stud	6	
21	18206	Impeller	1	
22	18202A	Cover Plate	1	
23	18021	Adapter Gasket	1	
24	15035E	EPDM Mechanical Seal Assembly	1	
25	18203A	Wet Seal Reservoir	1	
26	13778	O-Ring	2	
27	UV15163	O-Ring	2	
N/S	18100W	Repair Kit (Consist of items 2,8,23,)	1	

POLYETHYLENE SUCTION BASKET STRAINER			
PART NO	DESCRIPTION	QTY	PRICE EA
150SBS	1½" Female Thread Poly Basket	1	
200SBS	2" Female Thread Poly Basket	1	
300SBS	3" Female Thread Poly Basket	1	

*See page 179 for available base plate.

3" Cast Iron Pumps with Hydraulic Motors

PUMP FEATURES

- Rugged construction for dependable service.
- Carbon ceramic seal with stainless steel cup and spring with FKM (viton type) rubber.
- Replaceable inlet and outlet flanges.
- Dynamically balanced impeller.

HYDRAULIC MOTOR

- Hydraulic fluid capacity
  Minimum 9 Gallons / Maximum 13 Gallons.
- 21 H.P. Motor.
- Open system.
- Minimum 600 P.S.I. / Maximum 3000 P.S.I.

CAUTION-WARNING: Please do not run pumps dry, restrict or reduce port sizes or dead head pumps. This could cause component failure to pump.

DO NOT USE WITH FLAMMABLE LIQUIDS.

3" CAST IRON HYDRAULIC PUMPS					
PART NO	DESCRIPTION	HP	QTY	INV	PRICE EA
300PIHY	3" Cast Iron Pump w/21 HP Hydraulic Motor	21	1	MTO	

SPOOL VALVE ASSEMBLY DIAGRAM

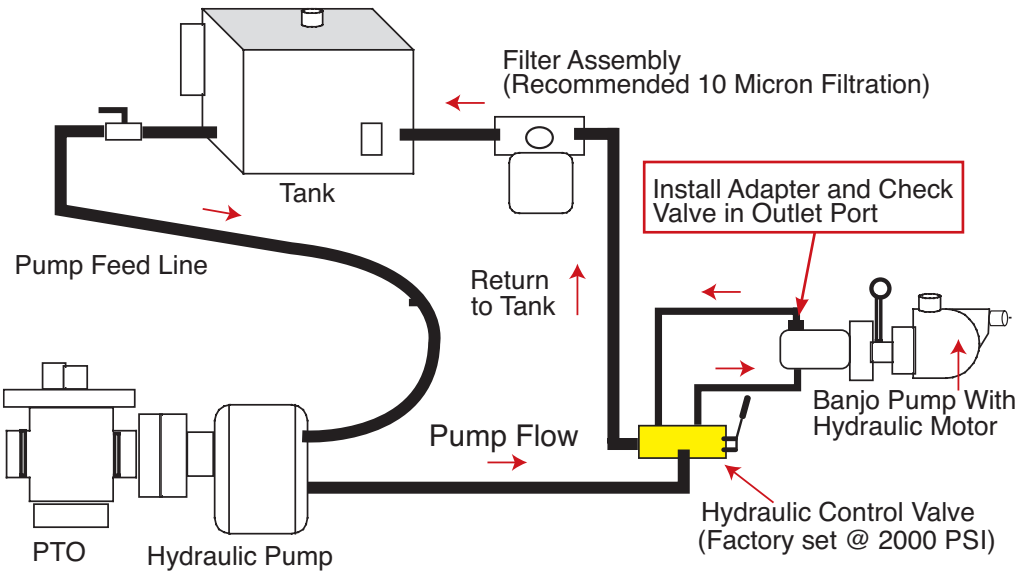

Recommendation:
We recommend using the motor spool control valve or a suitable equivalent. The lack of such a valve in this circuit may cause failure to the hydraulic motor.

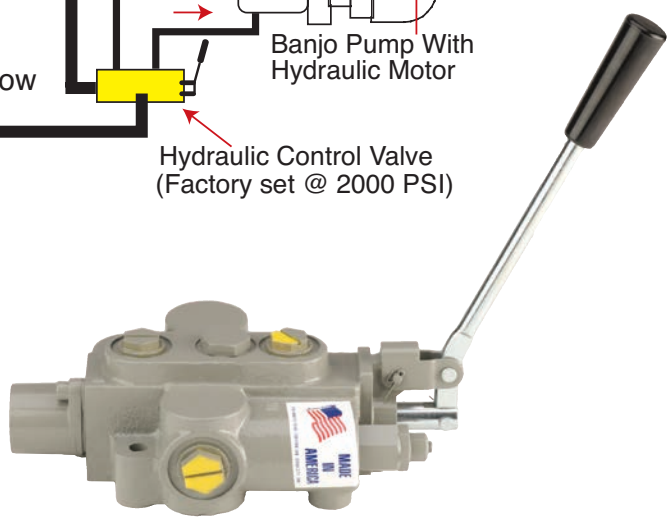

HYDRAULIC MOTOR SPOOL VALVE				
PART NO	DESCRIPTION	HP	QTY	PRICE EA
HSV1000	Hydraulic Motor Spool Valve	N/A	1	

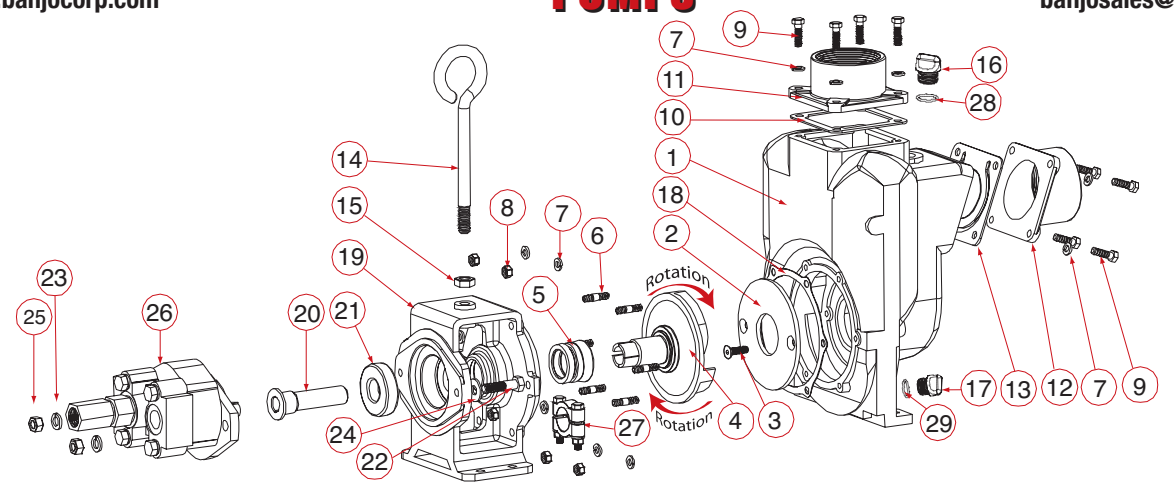

HYDRAULIC MOTOR DATA	
U.S. Gallons/Rev.	0.0038
Cubic Inches/Rev.	0.878
Liters/Rev.	0.0144
Max Hydraulic Pressure	3000 PSI
Min Hydraulic Pressure	600 PSI
Inlet Port	1-1/16-12UN-2B
Outlet Port	1-5/16-12UN-2B
Minimum GPM Required	9 GPM 2370 RPM
Maximum GPM Required	13 GPM 3450 RPM
Ideal GPM Required	9 GPM 3600 RPM
CONNECTION INFORMATION	
Inlet	"A" Port
Outlet	"B" Port
Supplied check valve is to ensure proper rotation of the Banjo pump. Place check valve in outlet port (marked "B") for proper right hand rotation. It is recommended that a minimum ¾" inlet line & a minimum 1" outlet line be used. The outlet port must be connected directly back to the hydraulic fluid reservoir & not to any valving, regulators or flow diverters. The outlet port/return line back pressure must not exceed 250 PSI.	
SPOOL VALVE INFORMATION	
Required Outlet Flow	Min 9 GPM / Max 13 GPM
Required System Pressure	Min 600 PSI / Max 3000 PSI

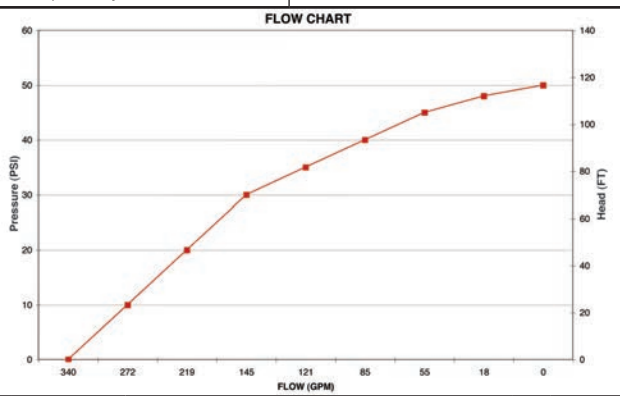

REPLACEMENT PARTS 3" HYDRAULIC ADAPTER

ITEM	PART NO	DESCRIPTION	QTY	PRICE EA
1	18049	C-Flange Hydraulic Motor Adapter	1	
2	18021	Gasket Adapter	1	
3	18025	Seal Assembly	1	
4	18502	SKF 63306-2RS1/C3 Bearing	1	
5	18055	Hydraulic Adapter Shaft Sleeve	1	
6	HY1012	Tyrone® UM16 Hydraulic Motor	1	
7	18059	½" Flat Washer	2	
8	18058	½" Split Lock Washer	2	
9	18056	½" - 13" x 2" HHCS Bolt	2	
10	17010	½" Hex Nut	2	
11	18600	Hydraulic Motor Adapter Assembly	1	
N/S	HY1001	Repair Kit	1	

REPLACEMENT PARTS 3" CAST IRON HYDRAULIC PUMPS

ITEM	PART NO	DESCRIPTION	QTY	PRICE EA
1	18001	Pump Housing	1	
2	18004	Wear Plate	1	
3	18106	⅜" - 16 x 1.25" HHCS	2	
4	18023	Impeller & Drive Shaft	1	
5	18025	FKM (viton type) Mechanical Seal	1	
5	18025SD	Severe Duty Seal	1	
6	18218	⅜" -16 x 24 x 2⅛" SS Stud	6	
7	V20018	⅜" Lock Washer	14	
8	V20019	⅜" 16 SS Hex Nut	6	
9	18010SS	⅜" - 16 x 1.25" HHCS	8	
10	18009	EPDM Outlet Gasket	1	
11	18008	NPT Outlet Flange	1	
12	18012	NPT Inlet Flange	1	
13	18013	Inlet/Check EPDM Gasket	1	
14	18033	Handle	1	
15	18034	⅝" -11 Hex Nut	1	
16	13777	¾" Plug	1	
17	12777	½" Plug	1	
18	18021	Adapter Gasket	1	
19	18049	Hydraulic Motor Adapter	1	
20	18055	Hydraulic Adapter Shaft	1	
21	18502	Bearing SKF 66306-2RS1/C3	1	
22	18056	½" -13 x 2" HHCS	2	
23	18058	½" Split Washer	2	
24	18059	½" Flat Washer	2	
25	17010	½" - 13 Hex Nut	2	
26	HY1012	UM16-45A-HX Hydraulic Motor Assembly	1	
27	18029	Clamp Assembly Unkeyed	1	
28	13778	O-Ring	1	
29	UV15163	O-Ring	1	
N/S	18100	Repair Kit (Consist of 2, 3, 4, 5, 18)	1	

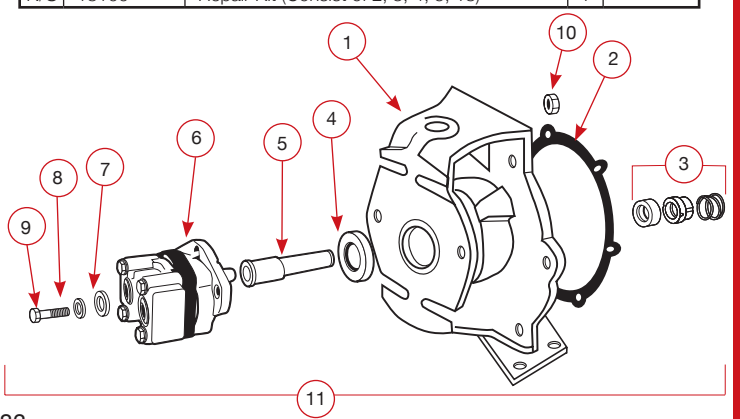

3" 333 Series Cast Iron Pumps

FEATURES

- Durable cast iron construction.
- Dynamically balanced impeller.
- Replaceable inlet and outlet flanges.
- Graphite loaded silicon carbide sealwith stainless steel cup and spring with FKM (viton type) rubber.
- Pump end separated from engine.
- Large weep holes between pump end and engine.
- "V" Shaped for quicker priming.

CAUTION-WARNING: Please do not run pump dry, restrict or reduce port sizes, or dead head pump. This could cause component failure to pump.

DO NOT USE WITH FLAMMABLE LIQUIDS.

NOTE: Engine warranty service available at authorized Briggs & Stratton and Honda dealers.

***SHIPPING**: Truck shipments only.

333PIH13

333 SERIES CAST IRON PUMPS W/ELECTRIC MOTORS					
PART NO	DESCRIPTION	HP	QTY	INV	PRICE EA
333PIE15	3" Cast Iron Pump w/15 HP Three Phase Electric Motor	15	1	MTO	

333 SERIES CAST IRON PUMPS W/GAS ENGINES					
PART NO	DESCRIPTION	HP	QTY	INV	PRICE EA
333PIH13	3" Cast Iron Pump w/13 HP Honda® Engine w/ electric Start & Pull Rope	13	1	MTO	

333 SERIES CAST IRON BEARING PEDESTAL					
PART NO	DESCRIPTION	HP	QTY	INV	PRICE EA
333PBI	3" Cast Iron Bearing Pedestal w/1" Shaft	N/A	1	MTO	

333 SERIES CAST IRON PUMP ONLY					
PART NO	DESCRIPTION	HP	QTY	INV	PRICE EA
333POI	3" Cast Iron Pump Only w/1" x 3 5/8" Shaft & 5 Vane Impeller Unassembled	N/A	1	MTO	

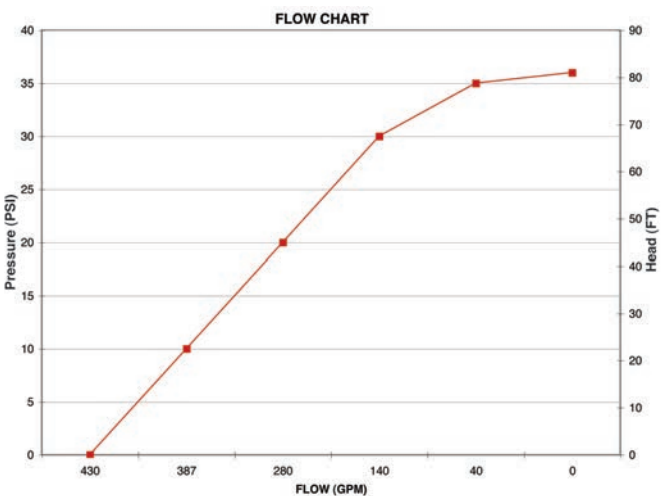

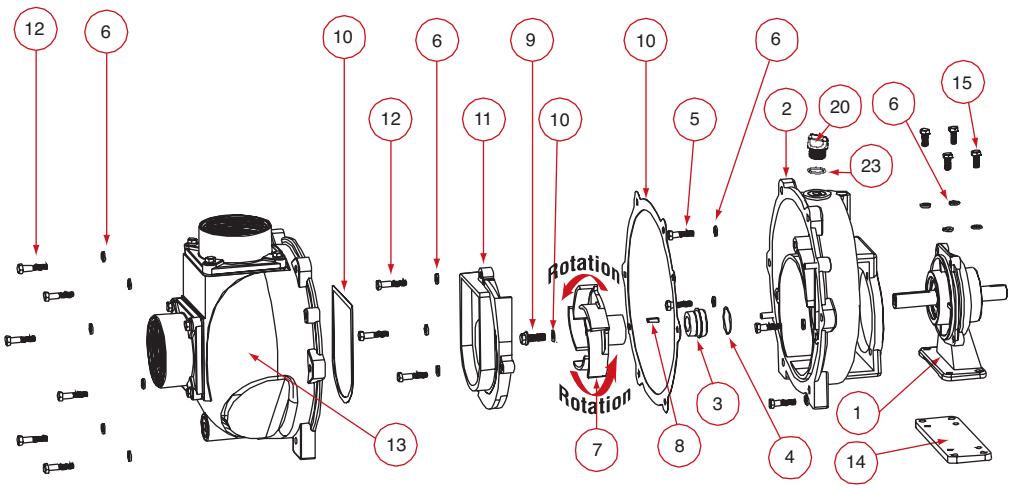

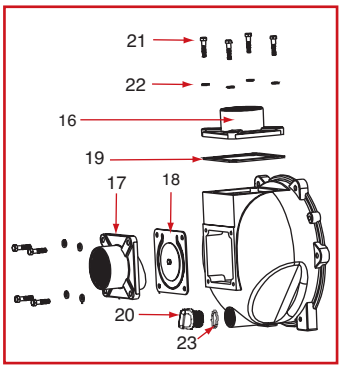

16733 Body Assembly

REPLACEMENT PARTS 333PIH13 & 333PBI				
ITEM	PART NO	DESCRIPTION	QTY	PRICE EA
N/S	16099	Impeller Removal Bolt	1	
1	18500	Bearing Pedestal (333PBI)	1	
2	16704	Rear Bracket	1	
3	16713	Mechanical Seal	1	
4	16710	O-Ring	1	
5	17704	3/8" - 16 x 1.25" SS Cap Screw (333PBI)	4	
6	V20018	3/8" SS Lock Washer	17	
7	16773	3" Impeller (333PBI)	1	
7	16774	3" Impeller (333PIH13 & 333POI)	1	
8	16901	1/4" SQ. 3/4" Key Stock	1	
9	16765	Impeller Bolt (333PBI)	1	
9	13765	Impeller Bolt (333PPIH13)	1	
10	16019	Gasket Set	1	
11	16702	Volute	1	
12	V20011SS	3/8" - 16 x 1.75" SS Bolt	9	
13	16733	Body	1	
14	18511	Adapter Plate (333PBI)	1	
15	18512	3/8" - 16 x 0.875" SS HHCS (333PBI)	4	
N/S	16751	Bracket Shim Set	1	
N/S	16752	Impeller Shim	1	
N/S	18033	Handle	1	
N/S	18034	5/8" SS Jam Nut	1	
16	16001	Outlet Flange	1	
17	16003	Inlet Flange	1	
18	16706	FKM (viton type) Inlet Gasket w/ Check	1	
19	16011	FKM (viton type) Outlet Gasket	1	
20	13777	3/4" Plug	2	
21	18027	3/8" - 16 x 1.50" HHCS (333PIH13)	8	
22	V20018	3/8" SS Lock Washer	8	
23	13778	O-Ring	2	

REPLACEMENT PARTS 333PIE15				
ITEM	PART NO	DESCRIPTION	QTY	PRICE EA
N/S	16099	Impeller Removal Bolt	1	
2	16704A	Rear Bracket w/C-Face Adapter	1	
3	15025	Mechanical Seal	1	
6	V20018	3/8" SS Lock Washer	8	
7	16773A	3" Impeller - 5 Vane	1	
8	17901	1/4" SQ. 3/4" Key Stock	1	
9	16765	7/16-20 1 1/4" HFS	1	
10	16019	Gasket Set	1	
11	16702	Volute	1	
12	V20011SS	3/8" - 16 x 1.75" SS Bolt	9	
13	16733	Body	1	
N/S	16751	Bracket Shim Set	1	
N/S	16752	Impeller Shim	1	
N/S	18033	Handle	1	
N/S	18034	5/8" SS Jam Nut	1	
16	16001	Outlet Flange	1	
17	16003	Inlet Flange	1	
18	16706	FKM (viton type)Inlet Gasket w/ Check	1	
19	16011	FKM (viton type) Outlet Gasket	1	
20	13777	3/4" Plug	2	
21	18027	3/8" - 16 x 1.50" HHCS	8	
22	V20018	3/8" SS Lock Washer	4	
23	13778	O-Ring	2	

3" M332 Series Cast Iron Manifold Wet Seal Pumps

FEATURES

- Durable cast iron construction.
- Dynamically balanced impeller.
- Carbon ceramic seal with stainless steel cup and spring with FKM (viton type) rubber.
- Pump end separated from engine.
- Large weep holes between pump end and engine or motor.
- "V" Shaped for quicker priming.

DO NOT USE WITH FLAMMABLE LIQUIDS.

3" MANIFOLD WET SEAL CI PUMPS W/GAS ENGINES					
PART NO	DESCRIPTION	HP	QTY	INV	PRICE EA
M332PIH13W	3" Manifold Cast Iron Wet Seal Pump w/13 HP Honda® Engine w/Electric Start & Pull Rope	13	1	STK	

NOTE: Engine warranty service available at authorized Briggs & Stratton and Honda dealers.

***SHIPPING**: Truck shipments only.

3" MANIFOLD WET SEAL CI PUMPS W/ELECTRIC MOTORS					
PART NO	DESCRIPTION	HP	QTY	INV	PRICE EA
M332PIE10W	3" Manifold Cast Iron Wet Seal Pump w/10HP Three Phase Electric Motor	10	1	MTO	
M332PIE101W	3" Manifold Cast Iron Wet Seal Pump w/10HP Single Phase Electric Motor	10	1	MTO	

3" MANIFOLD WET SEAL CAST IRON PUMP ONLY					
PART NO	DESCRIPTION	HP	QTY	INV	PRICE EA
M332POIW	3" Manifold Cast Iron Wet Seal Pump Only	N/A	1	MTO	

3" MANIFOLD WET SEAL CAST IRON BEARING PEDESTAL					
PART NO	DESCRIPTION	HP	QTY	INV	PRICE EA
M332PBIW	3" Manifold Cast Iron Wet Seal Bearing Pedestal w/ 1" Shaft	N/A	1	MTO	

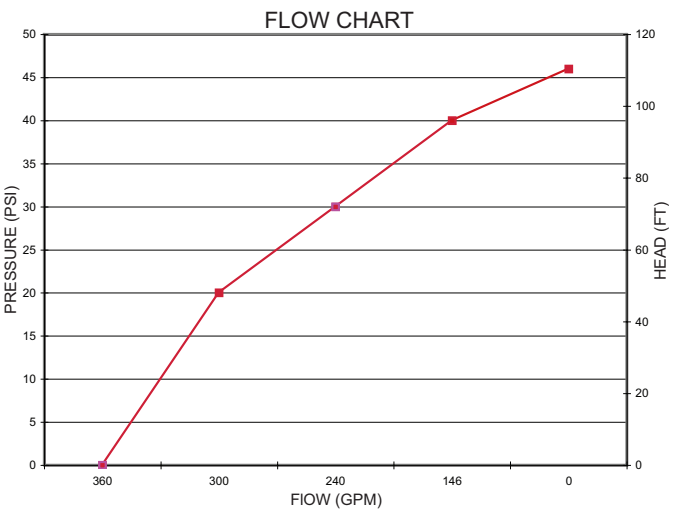

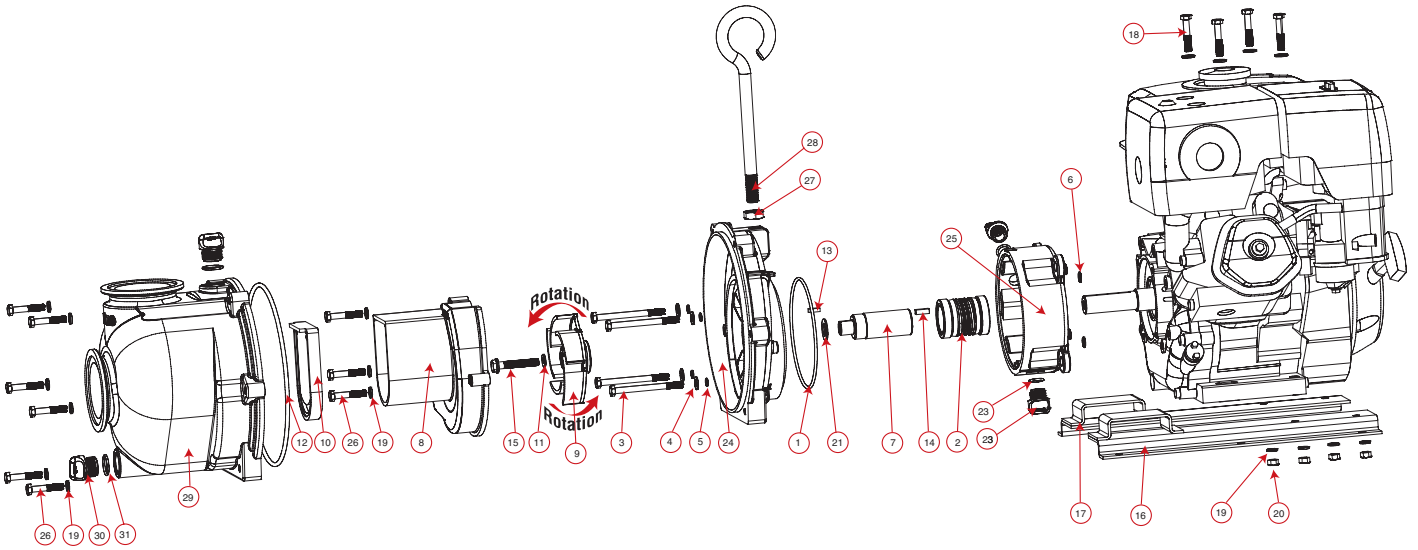

REPLACEMENT PARTS M332 WET SEAL CAST IRON PUMPS				
ITEM	PART NO	DESCRIPTION	QTY	PRICE EA
1	13719	O-Ring	1	
2	15035E	EPDM Mechanical Seal Assembly	1	
3	12034	5/16" - 24 x 3¾" HHCS	4	
4	12901	5/16" Flat Washer	8	
5	12717	O-Ring for Bracket Screw	4	
6	12709	O-Ring	4	
7	13055	Adapter Shaft	1	
8	19702	Volute	1	
9	19772	5 Vane Impeller	1	
10	12705	Check Valve	1	
11	12774VA	Impeller Bolt Gasket	1	
12	12719A	Body O-Ring	1	
13	12902A	Impeller Key	1	
14	16901	¼" sq x ¾" Key Stock	1	
15	13766	⅜" - 24 x 2¼" HFS	1	

REPLACEMENT PARTS M332 WET SEAL CAST IRON PUMPS				
ITEM	PART NO	DESCRIPTION	QTY	PRICE EA
16	18135B	Z-Rail	1	
17	18135A	Z-Rail	1	
18	17029	5/16" - 18 x 1¾" HHCS	4	
19	V10118	5/16" Lock Washer	13	
20	V10119	5/16" Hex Nut	4	
21	CV10175	Gasket	2	
22	12777	½" Plug	2	
23	UV15163	O-Ring	2	
24	19703W	Rear Bracket	1	
25	19201W	Wet Seal Reservoir	1	
26	12715A	5/16"- 24 x 1¾" HHCS	9	
27	18034	⅝"-11 Jam Nut	1	
28	18033	Pump Handle	1	
29	M19712X	Pump Body	1	
30	13777	¾" Plug	2	
31	13778	O-Ring	2	

NOTE: Prices listed are suggested retail price only. Please contact your local distributor for pricing.

3" M332 Series Cast Iron Manifold Wet Seal Pumps with Hydraulic Motors

FEATURES

- Durable cast iron construction.
- Dynamically balanced impeller.
- Carbon ceramic seal with stainless steel cup and spring with FKM (viton type) rubber.
- Pump end separated from engine.
- Large weep holes between pump end and motor.
- "V" Shaped for quicker priming.

DO NOT USE WITH FLAMMABLE LIQUIDS.

3" MANIFOLD WET SEAL CI HYDRAULIC PUMP					
PART NO	DESCRIPTION	HP	QTY	INV	PRICE EA
M332PIHYW	3" Manifold Cast Iron Wet Seal Pump w/21 HP Hydraulic Motor	21	1	MTO	

SPOOL VALVE ASSEMBLY DIAGRAM

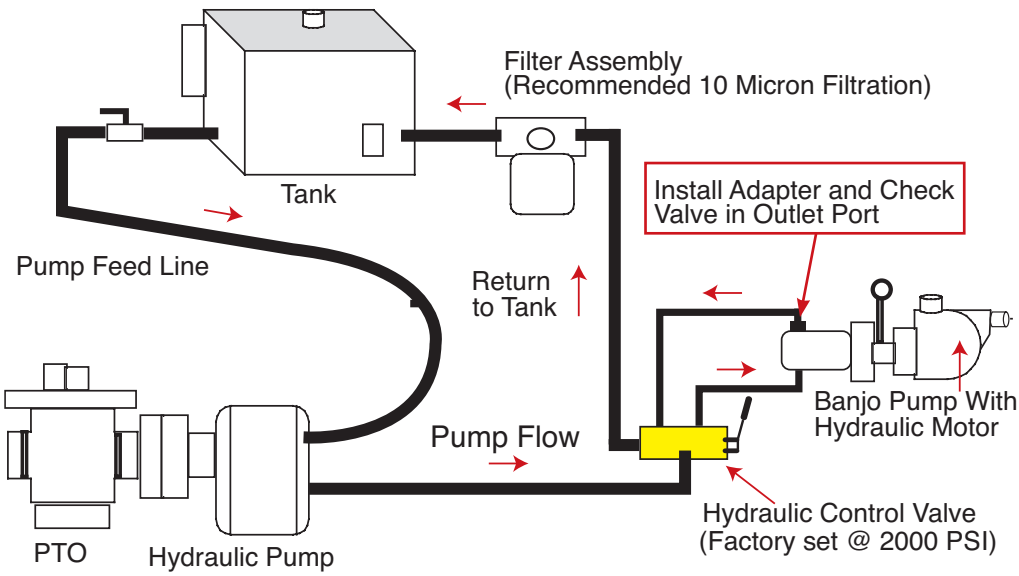

Recommendation:
We recommend using the motor spool control valve or a suitable equivalent. The lack of such a valve in this circuit may cause failure to the hydraulic motor.

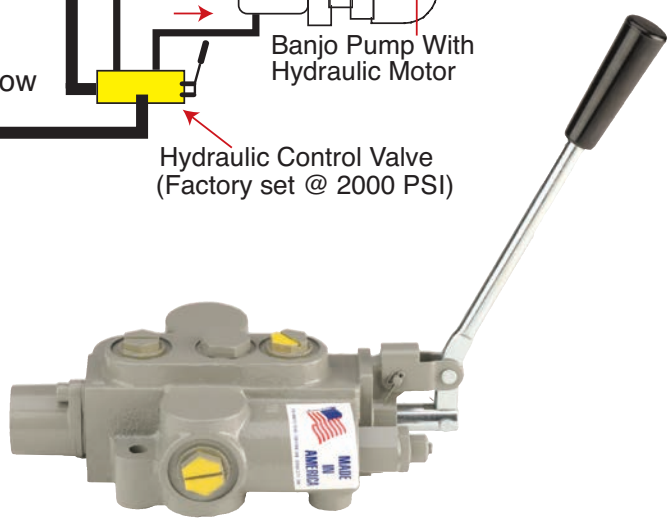

HYDRAULIC MOTOR SPOOL VALVE				
PART NO	DESCRIPTION	HP	QTY	PRICE EA
HSV1000	Hydraulic Motor Spool Valve	N/A	1	

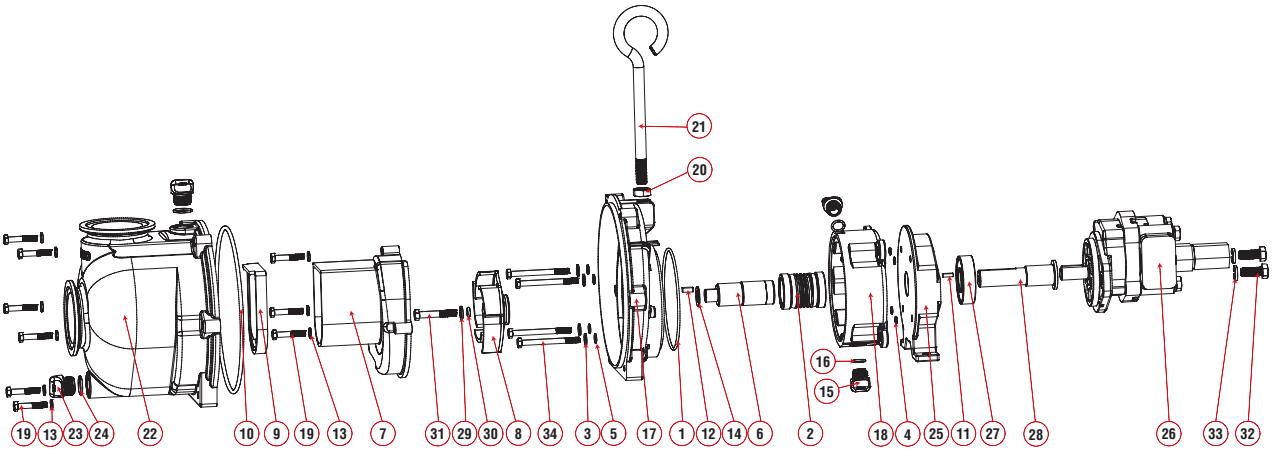

HYDRAULIC MOTOR DATA	
U.S. Gallons/Rev.	0.0038
Cubic Inches/Rev.	0.878
Liters/Rev.	0.0144
Max Hydraulic Pressure	3000 PSI
Min Hydraulic Pressure	600 PSI
Inlet Port	1-1/16-12UN-2B
Outlet Port	1-5/16-12UN-2B
Minimum GPM Required	9 GPM 2370 RPM
Maximum GPM Required	13 GPM 3450 RPM
Ideal GPM Required	9 GPM 3600 RPM
CONNECTION INFORMATION	
Inlet	"A" Port
Outlet	"B" Port
Supplied check valve is to ensure proper rotation of the Banjo pump. Place check valve in outlet port (marked "B") for proper right hand rotation. It is recommended that a minimum ¾" inlet line & a minimum 1" outlet line be used. The outlet port must be connected directly back to the hydraulic fluid reservoir & not to any valving, regulators or flow diverters. The outlet port/return line back pressure must not exceed 250 PSI.	
SPOOL VALVE INFORMATION	
Required Outlet Flow	Min 9 GPM / Max 13 GPM
Required System Pressure	Min 600 PSI / Max 3000 PSI

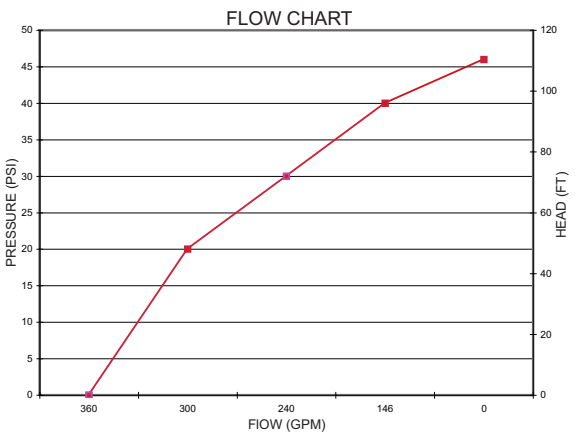

REPLACEMENT PARTS M332 WET SEAL HYRAULIC PUMP

ITEM	PART NO	DESCRIPTION	QTY	PRICE EA
1	13719	O-Ring	1	
2	15035E	EPDM Mechanical Seal Assembly	1	
3	12901	SS Rear Bracket Washer	4	
4	12717	O-Ring for Screw Head	4	
5	12709	O-Ring	4	
6	13055	Adapter Shaft	1	
7	19702	Volute	1	
8	19772	5 Vane Impeller	1	
9	12705	Check Valve	1	
10	12719A	Body O-Ring	1	
11	12902A	Impeller Key	1	
12	16901	¼" SQ. ¾" Key Stock	1	
13	V10118	5⁄16" SS Lock Washer	9	
14	CV10175	Gasket	2	
15	12777	½" Plug	2	
16	UV15163	Prime/Drain Plug O-Ring	2	
17	19703W	Rear Bracket	1	
18	19201W	Wet Seal Reservoir	1	
19	12715A	SS Bracket Screws	9	
20	18034	5⁄8" SS Jam Nut	1	
21	18033	Handle	1	
22	M19712X	Pump Body	1	
23	13777	¾" Plug	2	
24	13778	O-Ring	2	
25	19001H	Reservoir Backing Plate	1	
26	HY1012	Tyrone® UM16 Hydraulic Motor	1	
27	18502	SKF 63306-2RS1/C3 Bearing	1	
28	18055H	Hydraulic Motor Adapter Shaft	1	
29	19766	3⁄8" Flat Washer	1	
30	A203V	O-Ring	1	
31	BF207	3⁄8" - 16 x 2¼" HHCS	1	
32	17449	Bolt	2	
33	18058	½" Split Lock Washer	2	
34	V10117	5⁄16" x 3½" SS Body Bolt	4	

4" 444 Series Cast Iron Pumps

FEATURES

- Durable cast iron construction.
- Dynamically balanced impeller.
- Replaceable inlet and outlet flanges.
- Graphite loaded silicon carbide seal with stainless steel cup and spring with FKM (viton type) rubber.
- Pump end separated from engine.
- Large weep holes between pump end and engine.
- "V" Shaped for quicker priming.

CAUTION-WARNING: Please do not run pump dry, restrict or reduce port sizes, or dead head pump. This could cause component failure to pump.

DO NOT USE WITH FLAMMABLE LIQUIDS.

NOTE: Engine warranty service available at authorized Briggs & Stratton and Honda dealers.

***SHIPPING**: Truck shipments only.

444PIH24

444 SERIES CAST IRON PUMPS W/GAS ENGINES					
PART NO	DESCRIPTION	HP	QTY	INV	PRICE EA
444PI23	4" Cast Iron Pump w/23 HP Briggs & Stratton® Vanguard® Engine	23	1	MTO	
444PIH24	4" Cast Iron Pump w/24 HP Honda® Engine	24	1	MTO	

444 SERIES CAST IRON BEARING PEDESTAL					
PART NO	DESCRIPTION	HP	QTY	INV	PRICE EA
444PBI	4" Cast Iron Bearing Pedestal w/1" Shaft	N/A	1	MTO	
433PBI	4" Cast Iron Bearing Pedestal w/1" Shaft w/4" Inlet & 3" Outlet	N/A	1	MTO	

444 SERIES CAST IRON PUMP ONLY					
PART NO	DESCRIPTION	HP	QTY	INV	PRICE EA
444POI	4" Cast Iron Pump Only w/ 1⅛" x 3½" Shaft & 6 Vane Impeller Unassembled	N/A	1	MTO	

444PI23

Graphite Loaded Silicon Carbide Seal for Longer Seal Life.

Better Run Dry Capabilities!

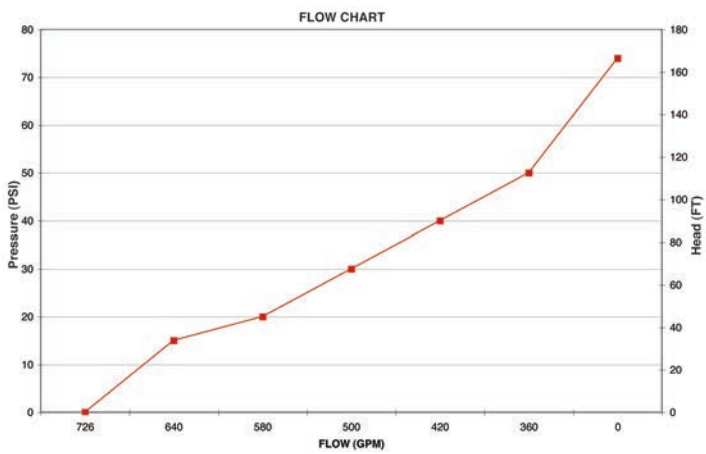

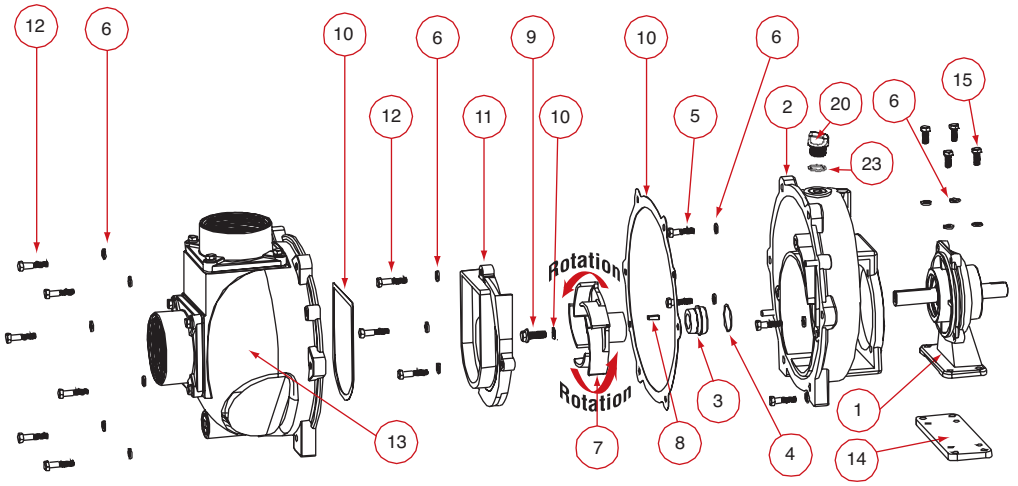

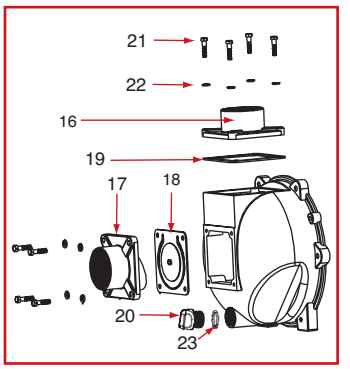

16712 Body Assembly

REPLACEMENT PARTS 444PI23 & 444PIH24 & 444POI				
ITEM	PART NO	DESCRIPTION	QTY	PRICE EA
N/S	16099	Impeller Removal Bolt	1	
2	16707	Rear Bracket	1	
3	18435	Mechanical Seal	1	
4	V10264	O-Ring	1	
5	17704	3/8" - 16 x 1.25" SS Cap Screw	4	
6	V20018	3/8" SS Lock Washer	13	
7	16775	4" Impeller	1	
8	16901	¼" SQ. ¾" Key Stock	1	
9	16765	Impeller Bolt	1	
10	16019	Gasket Set	1	
11	16702	Volute	1	
12	V20011SS	3/8" - 16 x 1.75" SS Bolt	9	
13	16712	Body	1	
N/S	16751	Bracket Shim Set	1	
N/S	16752	Impeller Shim	1	
N/S	18033	Handle	1	
N/S	18034	5/8" SS Jam Nut	1	
16	16000	Outlet Flange	1	
17	16002	Inlet Flange	1	
18	16706	Inlet Gasket w/ Check	1	
19	16011	Outlet Gasket	1	
20	13777	¾" Plug	2	
21	18027	3/8" - 16 x 1.50" HHCS	8	
22	V20018	3/8" SS Lock Washer	8	
23	13778	O-Ring	2	

REPLACEMENT PARTS 444PBI & 433PBI				
ITEM	PART NO	DESCRIPTION	QTY	PRICE EA
N/S	16099	Impeller Removal Bolt	1	
1	18500	Bearing Pedestal	1	
2	16703	Rear Bracket (444PBI)	1	
2	16704	Rear Bracket (433PBI)	1	
3	16713	Mechanical Seal	1	
4	16710	O-Ring	1	
5	17704	3/8" - 16 x 1.25" SS Cap Screw	4	
6	V20018	3/8" SS Lock Washer	17	
7	16772	4" Impeller -5 Vane (444PBI)	1	
7	16773	3" Impeller (433PBI)	1	
8	16901	¼" SQ. ¾" Key Stock	1	
9	16765	Impeller Bolt	1	
10	16019	Gasket Set	1	
11	16702	Volute	1	
12	V20011SS	3/8" - 16 x 1.75" SS Bolt	9	
13	16712	Body (444PBI)	1	
13	16743	Body (433PBI)	1	
14	18511	Adapter Plate	1	
15	18512	3/8" - 16 x 0.875" SS HHCS	4	
N/S	16751	Bracket Shim Set	1	
N/S	16752	Impeller Shim	1	
N/S	18033	Handle	1	
N/S	18034	5/8" SS Jam Nut	1	
16	16000	4" Outlet Flange (444PBI)	1	
16	16001	3" Outlet Flange (433PBI)	1	
17	16002	Inlet Flange	1	
18	16706	Inlet Gasket w/ Check	1	
19	16011	Outlet Gasket	1	
20	13777	¾" Plug	2	
21	18027	3/8" - 16 x1.50" HHCS	8	
22	V20018	3/8" SS Lock Washer	8	
23	13778	O-Ring	2	

2" 316 Stainless Steel Pumps with Gas Engines

FEATURES

- Carbon ceramic seal consists of 316 stainless steel cup and spring with FKM (viton type) Elastomer.
- All 316 stainless steel wettable internal components: –Impeller –Sleeve –Wear plate –Fasteners
- 316 stainless steel housing.
- Dynamically balanced impeller.

CAUTION-WARNING: Please do not run pumps dry, restrict or reduce port sizes or dead head pumps. This could cause component failure to pump.

DO NOT USE WITH FLAMMABLE LIQUIDS.

NOTE: Engine warranty service available at authorized Briggs & Stratton and Honda dealers.

***SHIPPING**: Truck shipments only.

POWERED BY BRIGGS & STRATTON

2" SS BEARING PEDESTAL PUMPS					
PART NO	DESCRIPTION	HP	QTY	INV	PRICE EA
200PB-SS	2" SS Bearing Pedestal w/ ¾" Straight Shaft*	N/A	1	MTO	

Note: * Straight shaft for long coupling to electric motors

2" STAINLESS STEEL PUMPS W/GAS ENGINES					
PART NO	DESCRIPTION	HP	QTY	INV	PRICE EA
200PH5-SS	2" SS Pump w/5.5 HP Honda® Engine w/ Pull Rope Only	5.5	1	MTO	
200P6PROSS	2" SS Pump w/6.5 HP Briggs & Stratton® Engine Pro Series w/Pull Rope Only	6.5	1	MTO	

2" SS PUMP ONLYS					
PART NO	DESCRIPTION	HP	QTY	INV	PRICE EA
200PO-SS	2" SS Pump Only w/ ¾" Shaft Sleeve	N/A	1	MTO	

2" SS C-FLANGE PUMPS					
PART NO	DESCRIPTION	HP	QTY	INV	PRICE EA
200POSSCF5/8	2" SS C-Flange Pump w/ ⅝" Shaft Sleeve	N/A	1	MTO	
200POSSCF7/8	2" SS C-Flange Pump w/ ⅞" Shaft Sleeve	N/A	1	MTO	

Note: Recommendation for ⅝" Shaft: 56C Frame Size, 3 HP, 3450 RPM, & 5" Max Impeller for close coupling to electric motors.

Recommendation for ⅞" Shaft:145TC Frame Size, 3 HP, 3450 RPM, & 5" Max Impeller for close coupling to electric motors.

UNIVERSAL BASE PLATE ASSEMBLY			
PART NO	DESCRIPTION	QTY	PRICE EA
18700	Base Plate Assembly for 1½", 2" & 3" Cast Iron or Poly Pump (Plate, Coupling Guard, Bolt Bag & Shims)	1	
18702	Replacement Coupling Guard	1	

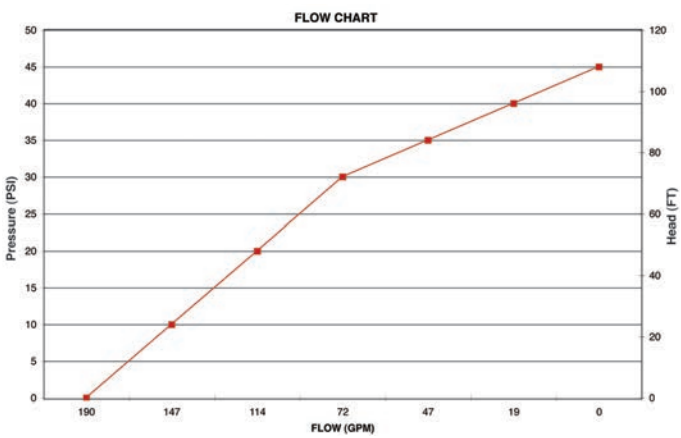

PUMPS

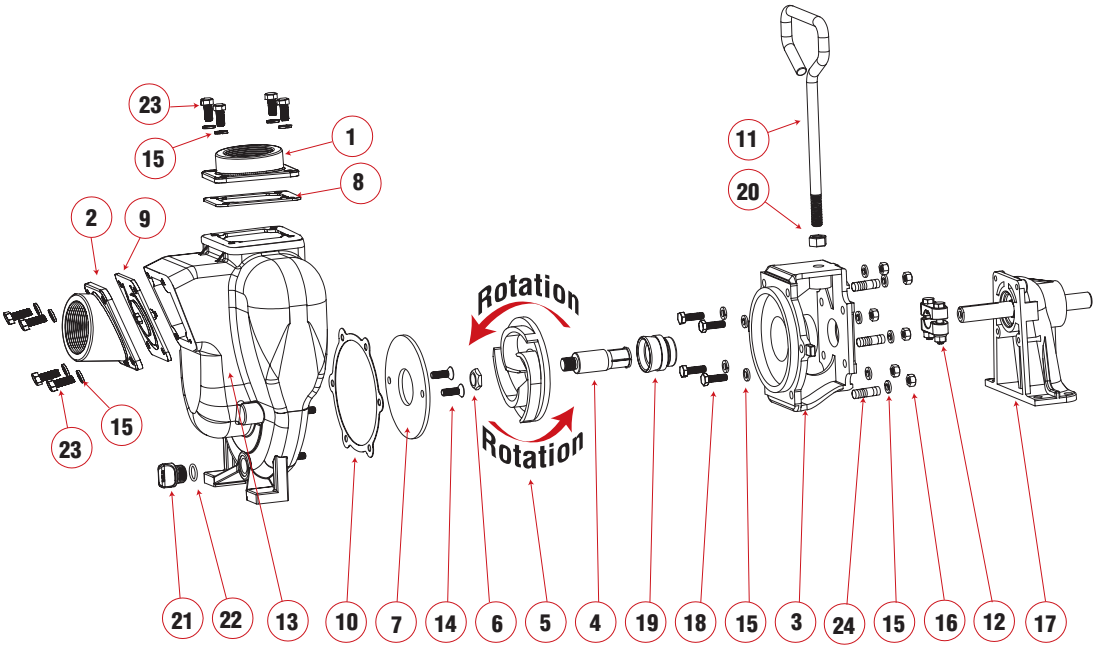

REPLACEMENT PARTS 2" SS PUMPS				
ITEM	PART NO	DESCRIPTION	QTY	PRICE EA
1	17000SS	SS Outlet Flange	1	
2	17002SS	SS Inlet Flange	1	
3	17004SS	SS Adapter for Gas Engine	1	
3	17046SS	CF Adapter for Electric Motor	1	
4	17005	5/8" SS Sleeve Drive	1	
4	17006*	3/4" SS Sleeve Drive	1	
4	17007	7/8" SS Sleeve Drive	1	
5	17008SS*	SS Impeller	1	
5	17008-4.1SS	4.1" SS Impeller	1	
5	17008-4.6SS	4.6" SS Impeller	1	
6	17009B	5/8" Impeller Nut	1	
7	17011SS*	SS Wear Plate	1	
8	17014	FKM (viton type) Outlet Gasket	1	
9	17017	FKM (viton type) Check Valve Assembly Gasket	1	
10	17018	Adapter Gasket	1	
11	15022	Handle	1	

REPLACEMENT PARTS 2" SS PUMPS				
ITEM	PART NO	DESCRIPTION	QTY	PRICE EA
12	17023	5/8" Clamp, 3/4" SS Shaft (Old Style)	1	
12	17123	5/8" Clamp, 3/4" SS Shaft (Keyed Clamp)	1	
12	17024	7/8" Clamp, 3/4" SS Shaft	1	
13	17026SS	SS Pump Housing	1	
14	17130SS	5/16-18 x 1.00" FHSCS, 316 SS	2	
15	V10118	5/16" Lock Washer	18	
16	V10119	5/16" -18 SS Hex Nut	6	
17	12882A	Bearing Pedestal Assembly w/ 3/4" Shaft	1	
18	17040	Bolt	4	
19	17035SS	FKM (viton type) SS Seal Assembly	1	
20	17010	1/2" - 24 x 1" HHCS	1	
21	12777SS	1/2" Stainless Steel Plug	1	
22	UV15163V	O-Ring FKM (viton type)	1	
23	17019	5/16" - 18 x 3/4" Cap Screw	8	
24	17042	Stud	6	
N/S	17100SS	Pump Repair Kit(Consists of 4,5,7,10,14,19)	1	

KITS 2" SS PUMPS				
PART NO	EPDM REPAIR KIT NO	PRICE EA	EPDM SEAL KIT NO	PRICE EA
200PH5-SS	17100SS		17035SS	
200P6PROSS	17100SS		17035SS	
200PB-SS	17100SS		17035SS	
200PO-SS	17100SS		17035SS	

2" Stainless Steel Pumps with Electric Motors

FEATURES

- Stainless steel construction for rugged dependable service.
- Stainless steel shaft sleeve to protect engine shaft.
- Carbon ceramic seal with stainless steel cup and spring with FKM (viton type) rubber.
- Replaceable inlet and outlet flanges.
- Dynamically balanced impeller.

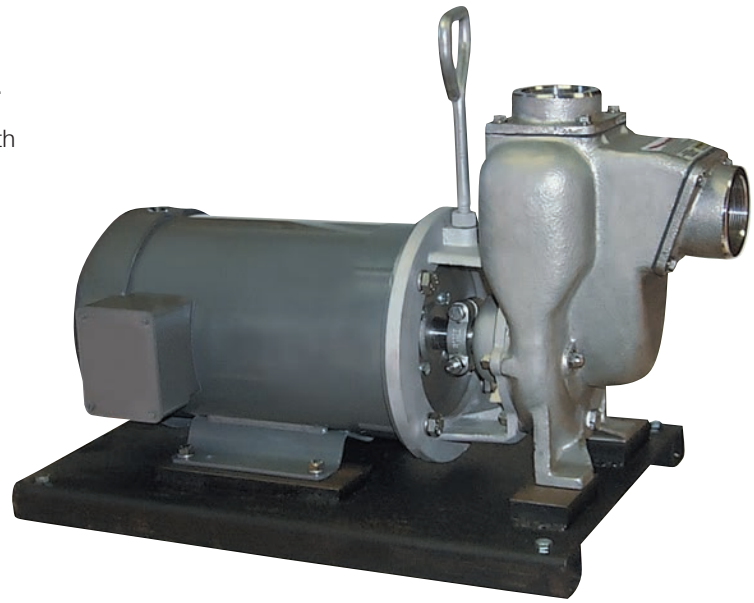

CAUTION-WARNING: Please do not run pumps dry, restrict or reduce port sizes or dead head pumps. This could cause component failure to pump.

DO NOT USE WITH FLAMMABLE LIQUIDS.

NOTE: Engine warranty service available at authorized Briggs & Stratton and Honda dealers.

***SHIPPING**: Truck shipments only.

2" SS PUMPS W/ELECTRIC MOTORS					
PART NO	DESCRIPTION	HP	QTY	INV	PRICE EA
234PE3SS	2" SS Pump w/3.0 HP Three Phase Electric Motor	3.0	1	MTO	
234PE5SS	2" SS Pump w/5.0 HP Three Phase Electric Motor	5.0	1	MTO	
234PE51SS	2" SS Pump w/5.0 HP Single Phase Electric Motor	5.0	1	MTO	

COMPLETE PUMP WITH EFFICIENT INDUSTRIAL ELECTRIC MOTORS!

MOTOR FEATURES

- Pressure cast aluminum end plates with ribbed design for rigidity.
- Ball bearings, locked drive end bearing.
- Heavy gauge steel frame.
- Motors wound with inverter spike resistance magnet wire.
- Mounted complete on heavy duty cast iron base plate.
- 230 V Motors.

POLYETHYLENE SUCTION BASKET STRAINER			
PART NO	DESCRIPTION	QTY	PRICE EA
150SBS	1½" Female Thread Poly Basket	1	
200SBS	2" Female Thread Poly Basket	1	
300SBS	3" Female Thread Poly Basket	1	

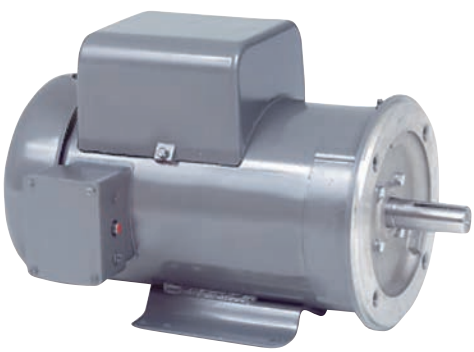

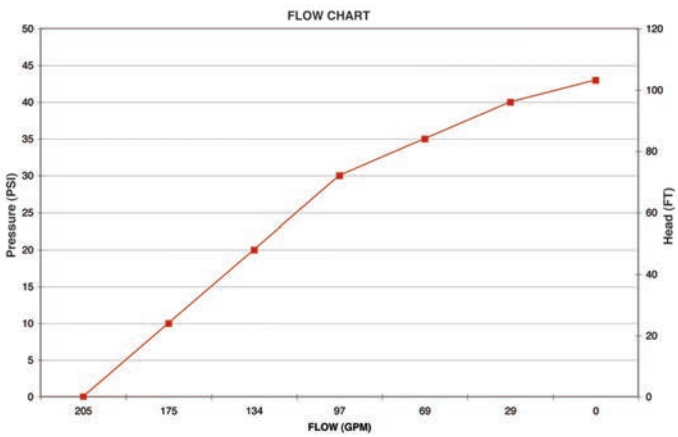

PUMPS

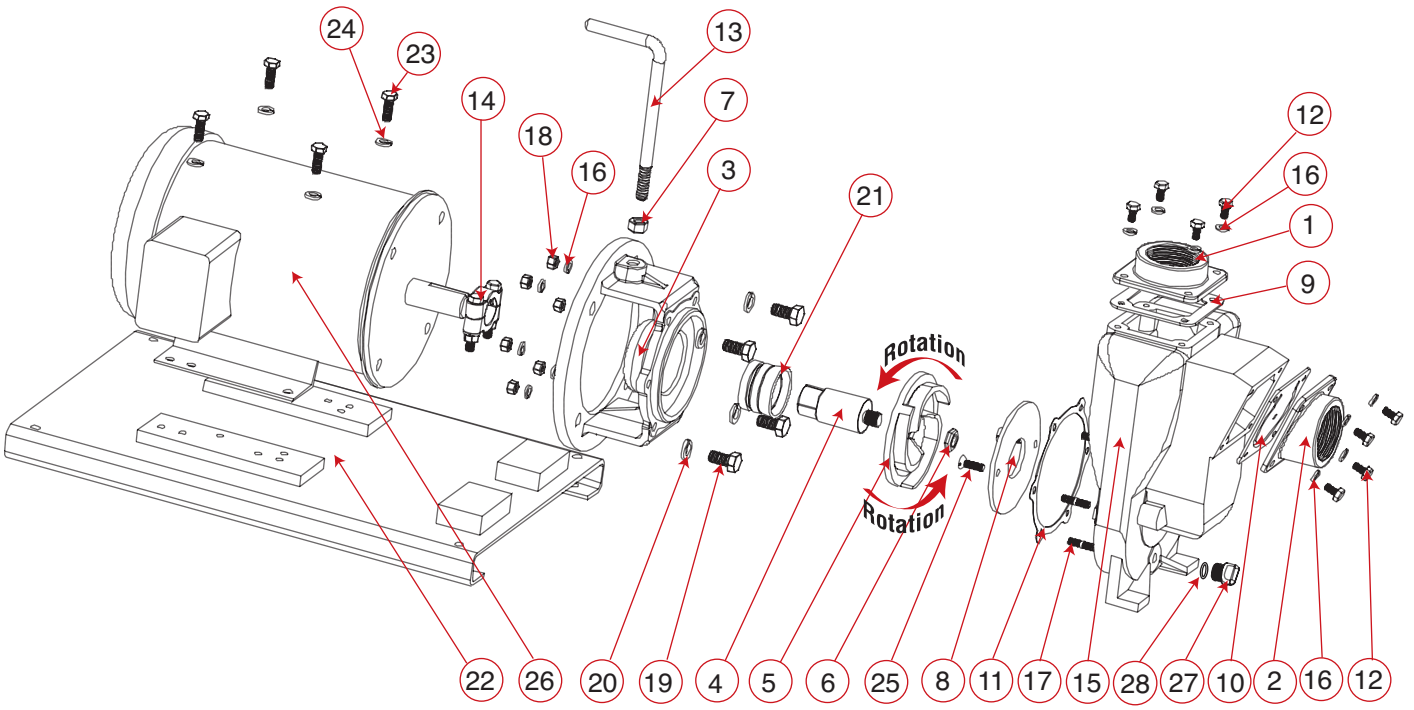

REPLACEMENT PARTS 234PE3SS				
ITEM	PART NO	DESCRIPTION	QTY	PRICE EA
1	17000SS	Outlet Flange	1	
2	17002SS	Inlet Flange	1	
3	17046SS	C-Flange Adapter	1	
4	17007	Impeller Shaft	1	
5	17008SS	Impeller	1	
6	17009B	5/8" Impeller Nut	1	
7	17010	1/2" Hex Nut	1	
8	17011SS	Wear Plate	1	
9	17014	FKM (viton type) Outlet Gasket	1	
10	17017	FKM (viton type) Gasket & Check Valve	1	
11	17018	Adapter Gasket	1	
12	17019	Bolt	8	
13	15022	Handle	1	
14	17024	Clamp Assembly w/Key	1	
15	17026SS	Pump Housing	1	
16	V10118	5/16" Lock Washer	20	
17	17042	Housing Stud	6	
18	V10119	Hex Nut	8	
19	17449	Bolt	4	
20	18058	Washer	4	
21	17035SS	Seal Assembly	1	
22	17701	Base Plate Assembly	1	
23	17704	Bolt	4	
24	V20018	3/8" Lock Washer	4	
25	17130SS	5/16-18 x 1.00" FHSCS, 316 SS	2	
26	BEM3	Electric Motor	1	
27	12777SS	1/2" Stainless Steel Plug	1	
28	UV15163	O-Ring FKM (viton type)	1	

REPLACEMENT PARTS 234PE5SS & 234PE51SS				
ITEM	PART NO	DESCRIPTION	QTY	PRICE EA
1	17000SS	Outlet Flange	1	
2	17002SS	Inlet Flange	1	
3	17446SS	C-Flange Adapter	1	
4	17406	Impeller Shaft	1	
5	17408SS	Impeller	1	
6	17009B	5/8" Impeller Nut	1	
7	17010	1/2" Hex Nut	1	
8	17011SS	Wear Plate	1	
9	17014	FKM (viton type) Outlet Gasket	1	
10	17017	FKM (viton type) Gasket & Check Valve	1	
11	17018	Adapter Gasket	1	
12	17019	Bolt	8	
13	15022	Handle	1	
14	18129	Clamp Assembly w/Key	1	
15	17026SS	Pump Housing	1	
16	V10118	5/16" Lock Washer	20	
17	17042	Housing Stud	6	
18	V10119	Hex Nut	8	
19	17449	Bolt	4	
20	18058	Washer	4	
21	18025SS	Seal Assembly	1	
22	17701	Base Plate Assembly	1	
23	17704	Bolt	4	
24	V20018	3/8" Lock Washer	4	
25	17130SS	5/16-18 x 1.00" FHSCS, 316 SS	2	
26	BEM5	Electric Motor	1	
26	BEM51	Electric Motor	1	
27	12777SS	1/2" Stainless Steel Plug	1	
28	UV15163V	O-Ring FKM (viton type)	1	

2" Stainless Steel Pumps with Hydraulic Motors

PUMP FEATURES

- Rugged construction for dependable service.
- Carbon ceramic seal with stainless steel cup and spring with FKM (viton type) rubber.
- Replaceable inlet and outlet flanges.
- Dynamically balanced impeller.

HYDRAULIC MOTOR FEATURES

- Hydraulic fluid capacity
  Minimum 6 Gallons / Maximum 10 Gallons.
- 12 H.P. Motor.
- Open or closed system.
- Minimum 500 P.S.I. / Maximum 2000 P.S.I.

CAUTION-WARNING: Please do not run pumps dry, restrict or reduce port sizes or dead head pumps. This could cause component failure to pump.

DO NOT USE WITH FLAMMABLE LIQUIDS.

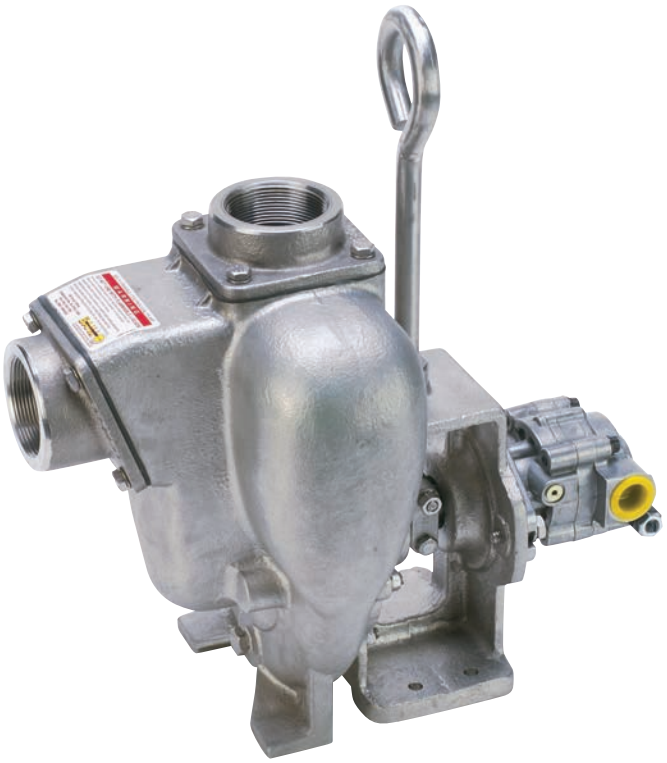

2" SS HYDRAULIC PUMPS					
PART NO	DESCRIPTION	HP	QTY	INV	PRICE EA
200PHYSS	2" SS Pump w/12 HP Hydraulic Motor	12	1	MTO	

SPOOL VALVE ASSEMBLY DIAGRAM

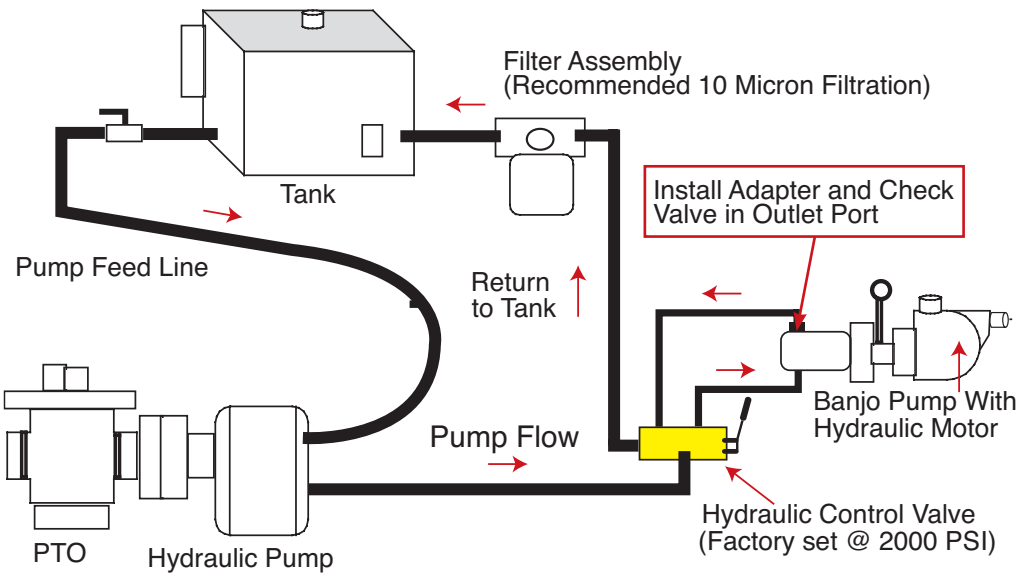

Recommendation:
We recommend using the motor spool control valve or a suitable equivalent. The lack of such a valve in this circuit may cause failure to the hydraulic motor.

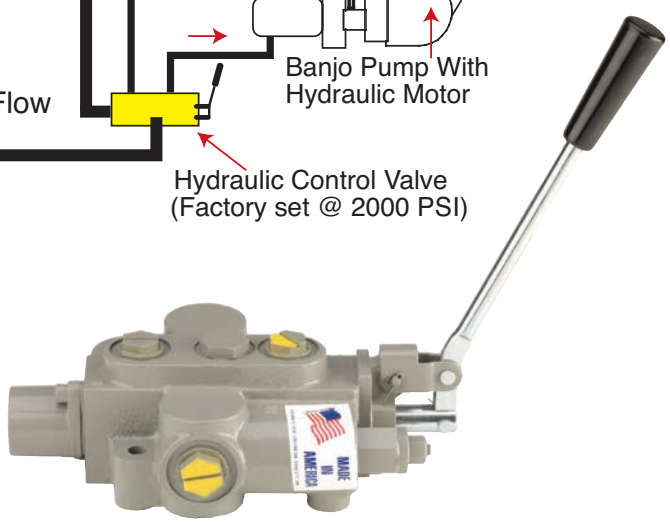

HYDRAULIC MOTOR SPOOL VALVE				
PART NO	DESCRIPTION	HP	QTY	PRICE EA
HSV1000	Hydraulic Motor Spool Valve	N/A	1	

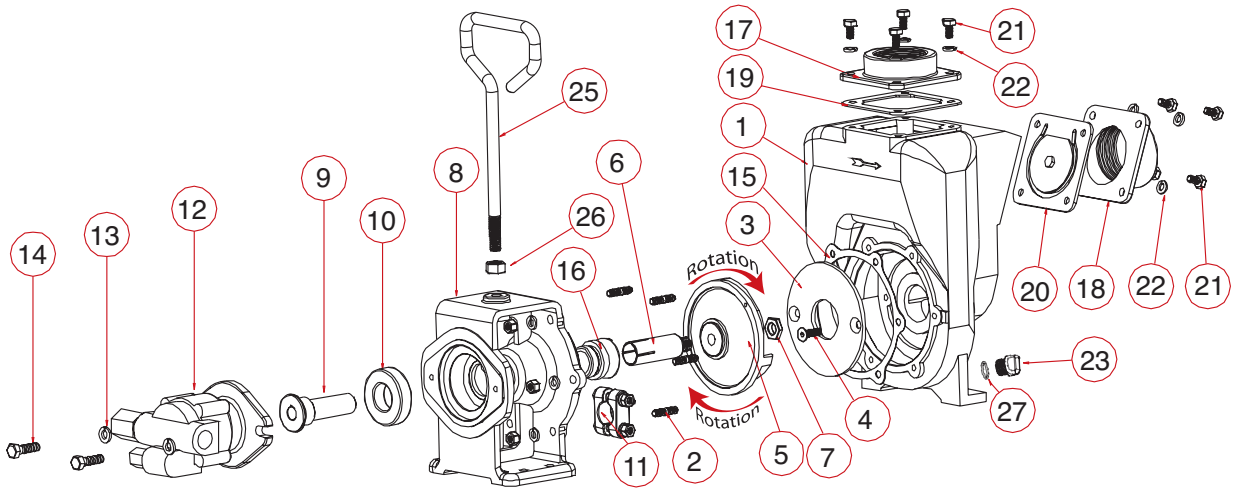

HYDRAULIC MOTOR DATA	
U.S. Gallons/Rev.	0.0025
Cubic Inches/Rev.	0.580
Liters/Rev.	0.0097
Max Hydraulic Pressure	2000 PSI
Min Hydraulic Pressure	200 PSI
Inlet Port	SAE 10 (7/8-14 UNF-2B)
Outlet Port	SAE 10 (7/8-14 UNF-2B)
Minimum GPM Required	6 GPM 2400 RPM
Maximum GPM Required	10 GPM 4000 RPM
Ideal GPM Required	9 GPM 3600 RPM
CONNECTION INFORMATION	
Inlet	"A" Port
Outlet	"B" Port
Supplied check valve is to ensure proper rotation of the Banjo pump. Place check valve in outlet port (marked "B") for proper right hand rotation.	
SPOOL VALVE INFORMATION	
Required Outlet Flow	Min 6 GPM / Max 10 GPM
Required System Pressure	Min 500 PSI / Max 2000 PSI

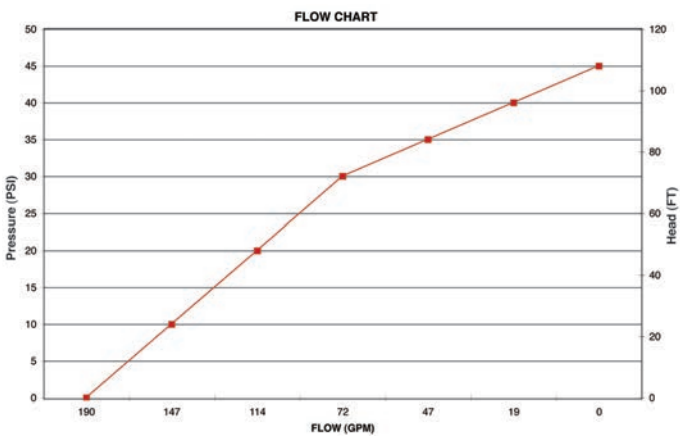

REPLACEMENT PARTS 2" SS PUMPS

ITEM	PART NO	DESCRIPTION	QTY	PRICE EA
1	17026SS	Pump Housing	1	
2	17042	Pump Housing Stud	6	
3	17011SS	Wear Plate	1	
4	17130SS	5/16-18 x 1.00" FHSCS, 316 SS	2	
5	17008SS	5" Impeller	1	
6	17007	7/8" Sleeve Drive for Electric Motor	1	
7	17009B	5/8" Impeller Nut	1	
8	17049ASS	Hydraulic Adapter	1	
9	17055A	Hydraulic Adapter Shaft	1	
10	17056	SKF 6206-2RS1 Bearing	1	
11	17024	7/8" Clamp, no key	1	
12	HY1013	MGG@0025BC1D3 Hydraulic Motor Assembly	1	
13	V20018	3/8" Lock Washer	2	
14	18010SS	3/8" - 16 x 1.25" HHHCS	2	
15	17018	Gasket Adapter	1	
16	17035SS	FKM (viton type) Seal Assembly	1	
17	17000SS	2" Outlet Flange	1	
18	17002SS	2" Inlet Flange	1	
19	17014	FKM (viton type) Gasket	1	
20	17017	Gasket Check Valve Assembly	1	
21	17019	5/16" -18 x 0.75" Cap Screw	8	
22	V10118	5/16" Split Lock Washer	14	
23	12777SS	1/2" Stainless Steel Plug	1	
24	V10119	5/16"-18 Hex Nut	6	
25	15022	Handle	1	
26	17010	1/2" Hex Nut -13UNF-RH	1	
27	UV15163V	O-Ring FKM (viton type)	1	

REPLACEMENT PARTS 2" SS HYDRAULIC ADAPTER

ITEM	PART NO	DESCRIPTION	QTY	PRICE EA
1	17049ASS	SS Hydraulic Motor Adapter	1	
2	17018	Gasket Adapter	1	
3	17035SS	Seal Assembly	1	
N/S	17007	7/8" SS Shaft Sleeve	1	
N/S	12214A	Shim	1	
4	17056	SKF 6206-2RS1 Bearing	1	
5	17055A	Hydraulic Adapter Shaft	1	
6	HY1013	Gresen® Hydraulic Motor	1	
7	V20018	Lock Washer	2	
8	18010SS	Bolt	2	

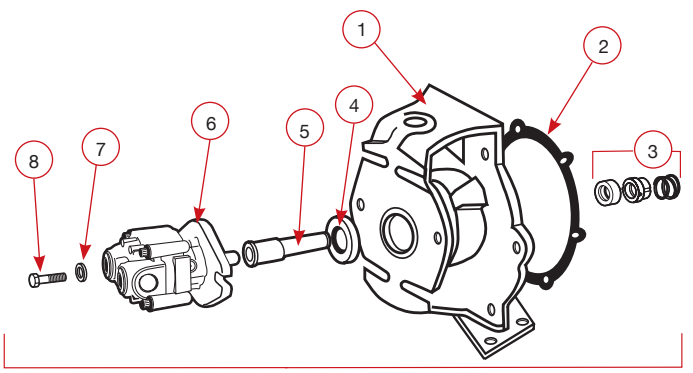

3" 316 Stainless Steel Pumps with Gas Engines

FEATURES

- Carbon ceramic seal consists of 316 stainless steel cup and spring with FKM (viton type) Elastomer.
- All 316 stainless steel wettable internal components: –Impeller –Sleeve –Wear plate –Fasteners
- 316 stainless steel housing.
- Dynamically balanced impeller.

CAUTION-WARNING: Please do not run pumps dry, restrict or reduce port sizes or dead head pumps. This could cause component failure to pump.

DO NOT USE WITH FLAMMABLE LIQUIDS.

NOTE: Engine warranty service available at authorized Briggs & Stratton and Honda dealers.

***SHIPPING**: Truck shipments only.

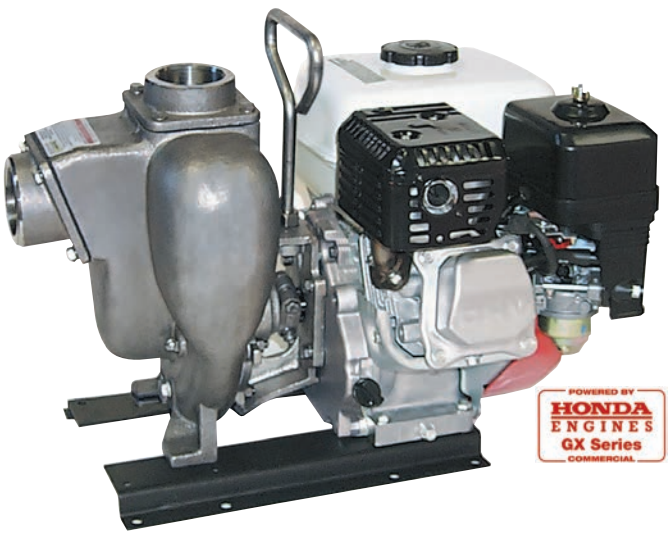

3" SS BEARING PEDESTAL PUMP					
PART NO	DESCRIPTION	HP	QTY	INV	PRICE EA
300PB-SS	3" SS Bearing Pedestal w/ 1" Straight Shaft*	N/A	1	MTO	

Note: * Straight shaft for long coupling to electric motors

3" SS PUMP ONLY					
PART NO	DESCRIPTION	HP	QTY	INV	PRICE EA
300PO-SS	3" SS Pump Only w/ 1" Shaft Sleeve	N/A	1	MTO	

3" SS C-FLANGE PUMP					
PART NO	DESCRIPTION	HP	QTY	INV	PRICE EA
300PO-SSCF	3" SS C-Flange Pump w/ 1⅛" Shaft Sleeve	N/A	1	MTO	

Note: Recommendation for ⅝" Shaft: 56C Frame Size, 3 HP, 3450 RPM, & 5" Max Impeller for close coupling to electric motors.

Recommendation for ⅞" Shaft:145TC Frame Size, 3 HP, 3450 RPM, & 5" Max Impeller for close coupling to electric motors.

3" STAINLESS STEEL PUMPS W/GAS ENGINES					
PART NO	DESCRIPTION	HP	QTY	INV	PRICE EA
300PH11-SS	3" SS Pump w/11 HP Honda® Engine w/Electric Start & Pull Rope	11	1	MTO	
300PH13SS	3" SS Pump w/13 HP Honda® Engine w/Electric Start & Pull Rope	13	1	MTO	

UNIVERSAL BASE PLATE ASSEMBLY			
PART NO	DESCRIPTION	QTY	PRICE EA
18700	Base Plate Assembly for 1½", 2" & 3" Cast Iron or Poly Pump (Plate, Coupling Guard, Bolt Bag & Shims)	1	
18702	Replacement Coupling Guard	1	

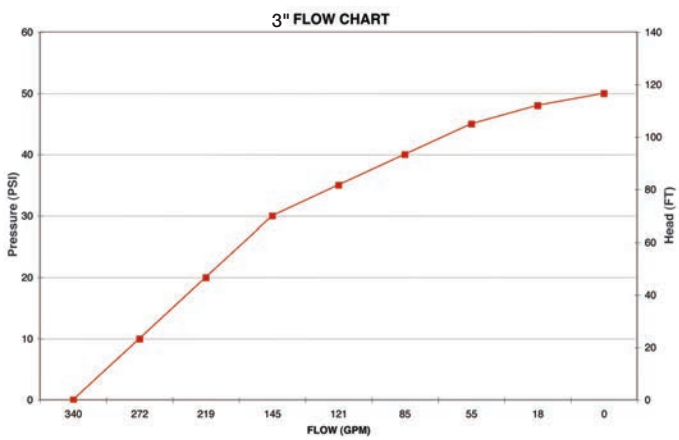

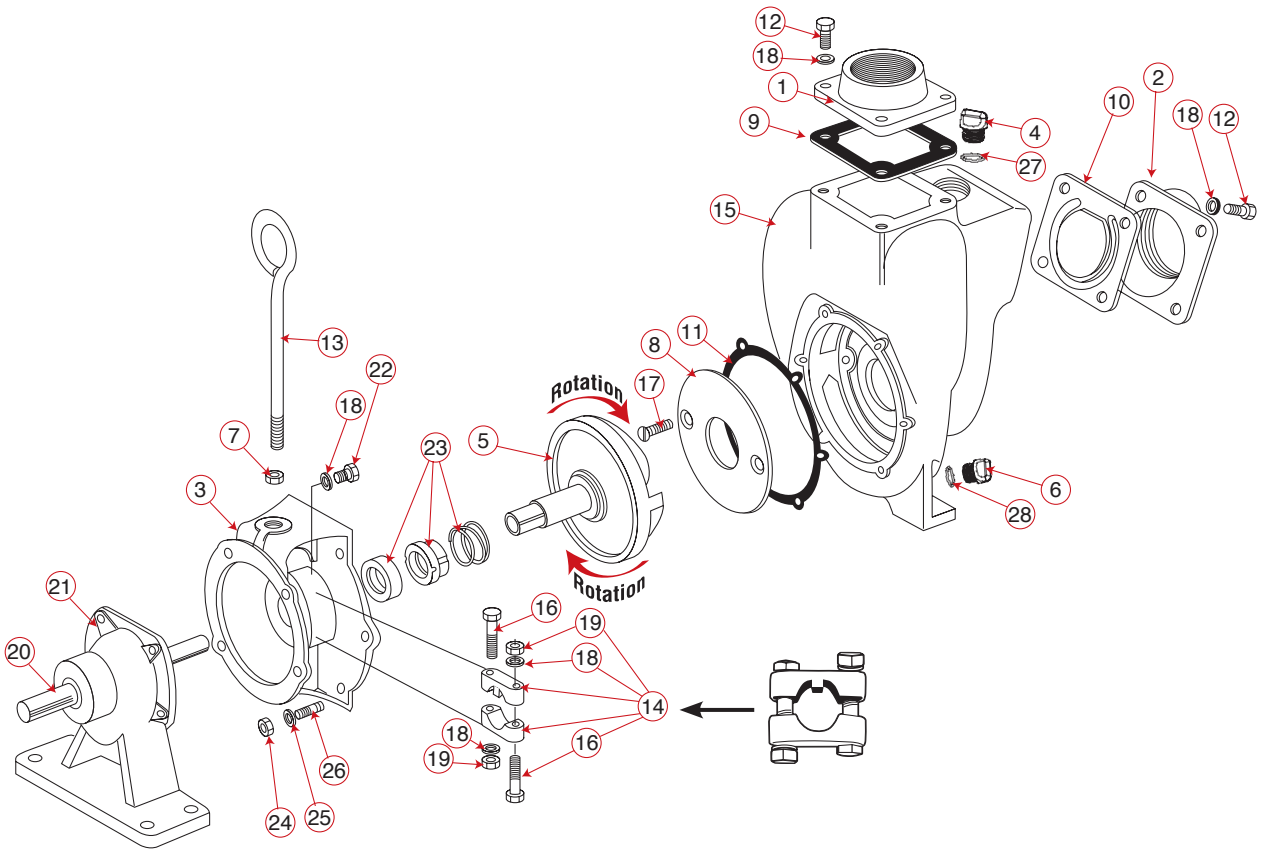

REPLACEMENT PARTS 3" SS PUMPS				
ITEM	PART NO	DESCRIPTION	QTY	PRICE EA
1	18008SS	NPT Outlet Flange	1	
2	18012SS	NPT Inlet Flange	1	
3	18026SS	Adapter for Gas Engine	1	
3	18048SS	SS C-Flange Adapter	1	
4	13777SS	¾" Stainless Steel Plug	1	
5	18023SS	1" SS Impeller & Drive Shaft for Gas Engine	1	
5	18023-1.125SS	1⅛" SS Impeller & Drive Shaft for Electric Motor	1	
6	12777SS	½" Stainless Steel Plug	1	
7	18034	⅝" SS Jam Nut	1	
8	18004SS	SS Wear Plate	1	
9	18044	FKM (viton type) Outlet Gasket	1	
10	18042	FKM (viton type)Gasket Check Valve Assembly	1	
11	18021	Adapter Gasket	1	
12	18010SS	⅜" - 16 x 1⅛" SS Cap Screw HXHD	8	
13	18033	Handle	1	
14	18129	Clamp Assembly	1	

REPLACEMENT PARTS 3" SS PUMPS				
ITEM	PART NO	DESCRIPTION	QTY	PRICE EA
15	18001SS	SS Pump Housing	1	
16	18030	⅜" -24 x 2¼" SS Bolt	2	
17	18106SS	Wear Plate Flat Head Screw	2	
18	V20018	⅜" Lock Washer	8	
19	18032	⅜" x 24 SS Hex Nut	2	
20	18504	1" Shaft	1	
21	18500	Bearing Pedestal	1	
22	18027	⅜" -16 x 1½" HHCS	1	
23	18025SS	FKM (viton type) Seal Assembly	1	
24	V20019	⅜" 16 SS Hex Nut	6	
25	V20018	⅜" SS Lock Washer	6	
26	18218	⅜" -16 x 24 x 2⅛" SS Stud	6	
27	13778V	O-Ring FKM (viton type)	1	
28	UV15163V	O-Ring FKM (viton type)	1	
N/S	18100SS	Repair Kit(Consist of items 5, 8,11,17 & 23)	1	

KITS 3" SS PUMPS				
PART NO	EPDM REPAIR KIT NO	PRICE EA	EPDM SEAL KIT NO	PRICE EA
300PH11-SS	18100SS		18025SS	
300PH13SS	18100SS		18025SS	
300PB-SS	18100SS		18025SS	
300PO-SS	18100SS		18025SS	

NOTE: Prices listed are suggested retail price only. Please contact your local distributor for pricing.

3" Stainless Steel Pumps with Hydraulic Motors

PUMP FEATURES

- Rugged construction for dependable service.
- Carbon ceramic seal with stainless steel cup and spring with FKM (viton type) rubber.
- Replaceable inlet and outlet flanges.
- Dynamically balanced impeller.

HYDRAULIC MOTOR

- Hydraulic fluid capacity
  Minimum 9 Gallons / Maximum 13 Gallons.
- 21 H.P. Motor.
- Open system.
- Minimum 600 P.S.I. / Maximum 3000 P.S.I.

CAUTION-WARNING: Please do not run pumps dry, restrict or reduce port sizes or dead head pumps. This could cause component failure to pump.

DO NOT USE WITH FLAMMABLE LIQUIDS.

3" SS HYDRAULIC PUMPS					
PART NO	DESCRIPTION	HP	QTY	INV	PRICE EA
300PHYSS	3" SS Pump w/21 HP Hydraulic Motor	21	1	MTO	

SPOOL VALVE ASSEMBLY DIAGRAM

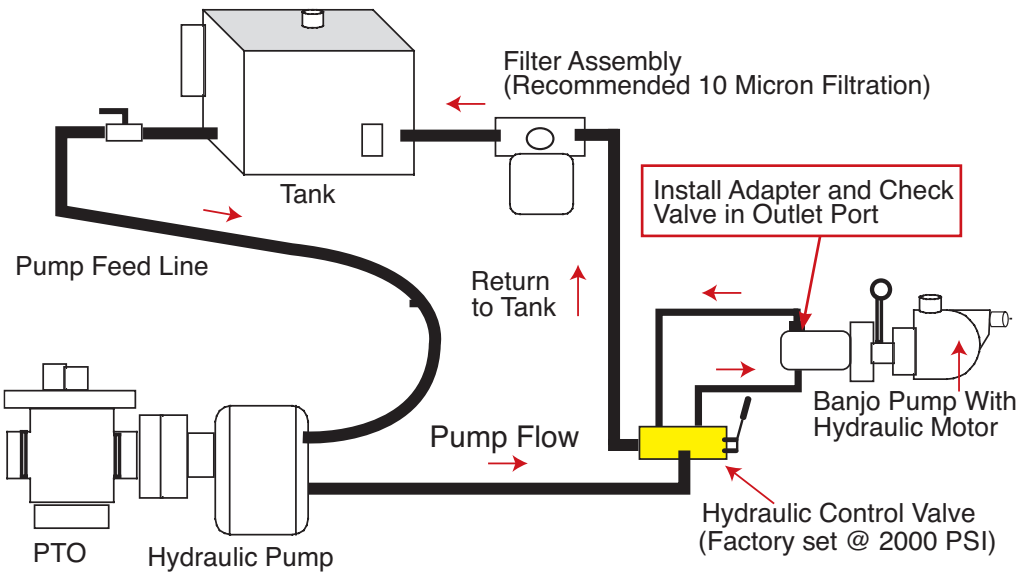

Recommendation:
We recommend using the motor spool control valve or a suitable equivalent. The lack of such a valve in this circuit may cause failure to the hydraulic motor.

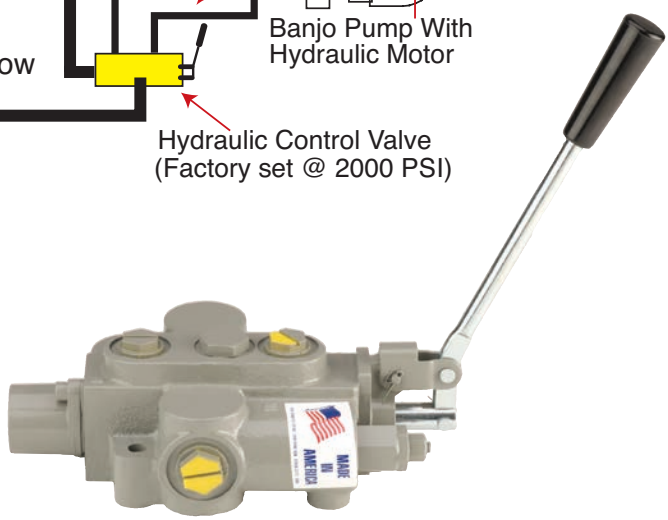

HYDRAULIC MOTOR SPOOL VALVE				
PART NO	DESCRIPTION	HP	QTY	PRICE EA
HSV1000	Hydraulic Motor Spool Valve	N/A	1	

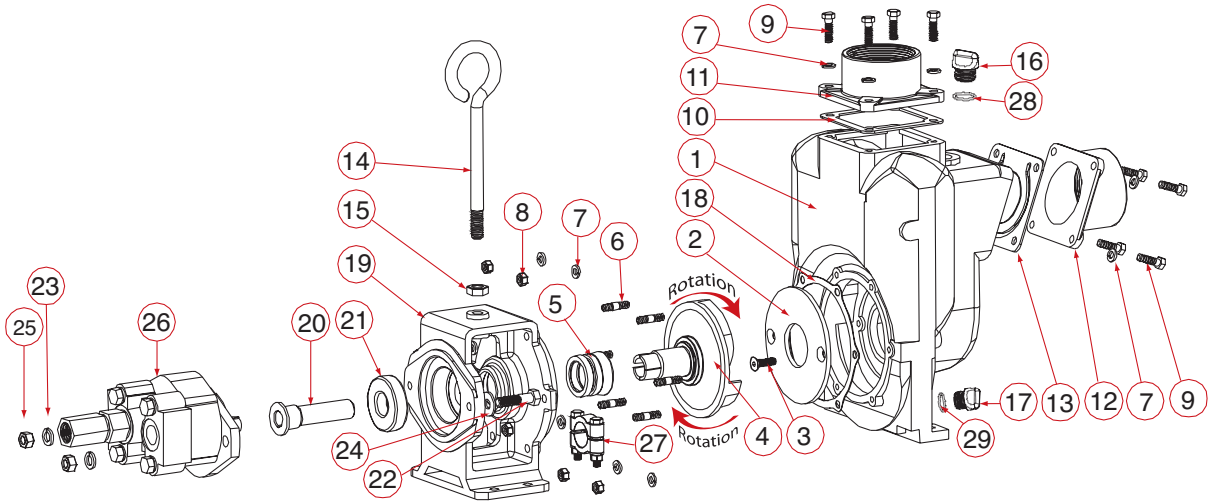

HYDRAULIC MOTOR DATA	
U.S. Gallons/Rev.	0.0038
Cubic Inches/Rev.	0.878
Liters/Rev.	0.0144
Max Hydraulic Pressure	3000 PSI
Min Hydraulic Pressure	600 PSI
Inlet Port	1-1/16-12UN-2B
Outlet Port	1-5/16-12UN-2B
Minimum GPM Required	9 GPM 2370 RPM
Maximum GPM Required	13 GPM 3450 RPM
Ideal GPM Required	9 GPM 3600 RPM
CONNECTION INFORMATION	
Inlet	"A" Port
Outlet	"B" Port
Supplied check valve is to ensure proper rotation of the Banjo pump. Place check valve in outlet port (marked "B") for proper right hand rotation. It is recommended that a minimum ¾" inlet line & a minimum 1" outlet line be used. The outlet port must be connected directly back to the hydraulic fluid reservoir & not to any valving, regulators or flow diverters. The outlet port/return line back pressure must not exceed 250 PSI.	
SPOOL VALVE INFORMATION	
Required Outlet Flow	Min 9 GPM / Max 13 GPM
Required System Pressure	Min 600 PSI / Max 3000 PSI

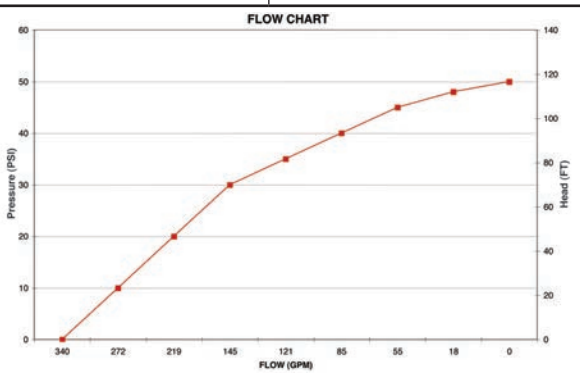

REPLACEMENT PARTS 3" SS PUMPS

ITEM	PART NO	DESCRIPTION	QTY	PRICE EA
1	18001SS	Pump Housing	1	
2	18004SS	Wear Plate	1	
3	18106SS	⅜"-16 x 1.25" HHCS	2	
4	18023SS	Impeller & Drive Shaft	1	
5	18025SS	FKM (viton type) Mechanical Seal	1	
6	18218	⅜" -16 x 24 x 2⅛" SS Stud	6	
7	V20018	⅜" Split Lock Washer	14	
8	V20019	⅜" 16 SS Hex Nut	6	
9	18010SS	⅜" - 16 x 1.25" HHCS	8	
10	18044	FKM (viton type) Outlet Gasket	1	
11	18008SS	NPT Outlet Flange	1	
12	18012SS	NPT Inlet Flange	1	
13	18042	FKM(viton type) Gasket Check Valve Assembly	1	
14	18033	Handle	1	
15	18034	⅝" SS Jam Nut	1	
16	13777SS	¾" Stainless Steel Plug	1	
17	12777SS	½" Stainless Steel Plug	1	
18	18021	Adapter Gasket	1	
19	18049SS	Hydraulic Motor Adapter	1	
20	18055	Hydraulic Adapter Shaft	1	
21	18502	Bearing	1	
22	18056	½"-13 x 2" HHCS	2	
23	18058	½" Split Lock Washer	2	
24	18059	½" Flat Washer	2	
25	17010	½" Hex Nut	2	
26	HY1012	UM16-45A-HX Hydraulic Motor Assembly	1	
27	18029	Clamp Assembly Unkeyed	1	
28	13778V	O-Ring FKM (viton type)	1	
29	UV15163V	O-Ring FKM (viton type)	1	
N/S	18100SS	Repair Kit(Consist of items 2, 3, 4, 5 & 18)	1	

REPLACEMENT PARTS 3" SS HYDRAULIC ADAPTER

ITEM	PART NO	DESCRIPTION	QTY	PRICE EA
1	18049SS	C-Flange Hydraulic Motor Adapter	1	
2	18021	Gasket Adapter	1	
3	18025SS	Seal Assembly	1	
4	18502	SKF 66306-2RS1/C3 Bearing	1	
5	18055	Hydraulic Adapter Shaft	1	
6	HY1012	Tyrone® Hydraulic Motor	1	
7	18059	½" Lock Washer	2	
8	18058	½" Split Lock Washer Bolt	2	
9	18056	½"-13 x 2" HHCS Bolt	2	
10	17010	½" Hex Nut	2	
11	18600SS	Hydraulic Motor Adapter Assembly	1	

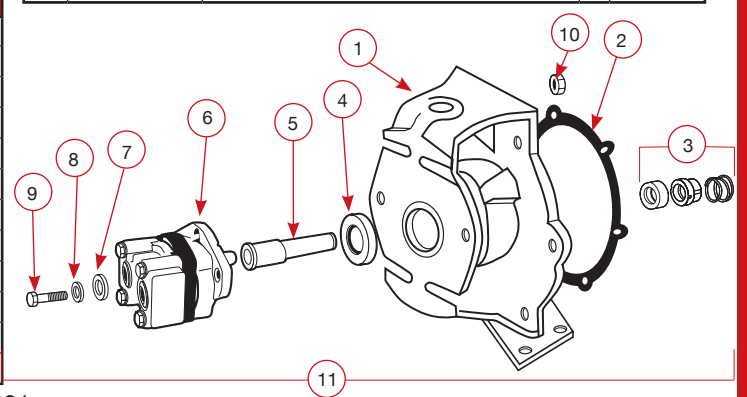

ENGINE REFERENCE				
BANJO PART NO	E3	E6.5PRO	E11PROE	E11PRO100
MANUFACTURER	Briggs & Stratton®	Briggs & Stratton®	Briggs & Stratton®	Briggs & Stratton®
MODEL NO	91200	122032013738C1040	2123320139B1G1032	2123320140B1G1016
RATED HP	3.5 HP @ 3600 RPM	6.5 HP @ 3600	11 HP @ 3600	11 HP @ 3600
RATED TORQUE	4.9 ft-lbs @ 2800 RPM	9 ft-lbs @ 2800 RPM	15.50 ft-lbs @ 2800 RPM	15.50 ft-lbs @ 2800 RPM
SHAFT SIZE	¾" Diameter w/ 3/16" Keyway	¾" Diameter w/ 3/16" Keyway	¾" Diameter w/ 3/16" Keyway	1" Diameter w/ ¼" Keyway
SHAFT ID THREAD	5/16"-24 UNF 2B	5/16"-24 UNF 2B	5/16"-24 UNF 2B	3/8"-24 UNF 2B
ENGINE OIL REQUIRED	Synethetic 5W30	Above 40°F: 30W Below 40°F: 5W30	Synethetic 10W30	Synethetic 10W30
ENGINE OIL CAPACITY	21 oz	20 oz	28 oz	28 oz
FUEL REQUIRED	77	77	77	77
FUEL TANK CAPACITY	.50 Gallon	1 Gallon	1 Gallon	1 Gallon
OIL ALERT	N	N	N	N
ELCTRIC START	N	N	N	N
OVER HEAD VALVE	N	N	N	N

ENGINE REFERENCE		
BANJO PART NO	E5H	E5HE
MANUFACTURER	Honda®	Honda®
MODEL NO	GX160	GX160
RATED HP	5.4 HP @ 3600	5.4 HP @ 3600
RATED TORQUE	8.0 ft-lbs @ 2500 RPM	8.0 ft-lbs @ 2500 RPM
SHAFT SIZE	¾" Diameter w/ 3/16" Keyway	¾" Diameter w/ 3/16" Keyway
SHAFT ID THREAD	5/16"-24 UNF 2B	5/16"-24 UNF 2B
ENGINE OIL REQUIRED	10W30	10W30
ENGINE OIL CAPACITY	.63 qt	.63 qt
FUEL REQUIRED	86	86
FUEL TANK CAPACITY	.95 Gallon	.95 Gallon
OIL ALERT	Y	Y
ELCTRIC START	N	Y
OVER HEAD VALVE	Y	Y

For Engine Warranty Service Contact:

Briggs and Stratton: (414) 259-5262 or www.briggsandstratton.com

Honda: (800) 426-7701 or www.honda.com

ENGINE REFERENCE				
BANJO PART NO	E6H	E8H	E11H	E13H
MANUFACTURER	Honda®	Honda®	Honda®	Honda®
MODEL NO	GX200	GX240	GX340	GX390
RATED HP	6.4 HP @ 3600	8.0 HP @ 3600	11.0 HP @ 3600	13.0 HP @ 3600
RATED TORQUE	7.76 ft-lbs @ 2600 RPM	12.3 ft-lbs @ 2500 RPM	17.4 ft-lbs @ 2500 RPM	19.5 ft-lbs @ 2500 RPM
SHAFT SIZE	¾" Diameter w/ 3/16" Keyway	1" Diameter w/ ¼" Keyway	1" Diameter w/ ¼" Keyway	1" Diameter w/ ¼" Keyway
SHAFT ID THREAD	5/16"-24 UNF 2B	3/8"-24 UNF 2B	3/8"-24 UNF 2B	3/8"-24 UNF 2B
ENGINE OIL REQUIRED	10W30	10W30	10W30	10W30
ENGINE OIL CAPACITY	.63 qt	1.16 qt	1.16 qt	1.16 qt
FUEL REQUIRED	86	86	86	86
FUEL TANK CAPACITY	.95 Gallon	1.59 Gallon	1.72 Gallon	1.72 Gallon
OIL ALERT	Y	Y	Y	Y
ELCTRIC START	N	Y	Y	Y
OVER HEAD VALVE	Y	Y	Y	Y

ENGINE REFERENCE					
BANJO PART NO	BEM3	BEM5	BEM51	BEM10	BEM15
MANUFACTURER	Marathon®	Marathon®	Marathon®	Marathon®	Marathon®
MODEL NO	C236	C385	184TBFR17009	C392	215TTFW14010
RATED HP	3 HP	5 HP	5 HP	10 HP	15 HP
SHAFT SIZE	7/8"	1 1/8"	1 1/8"	1 3/8"	1 3/8"
DESCRIPTION	TEFC	TEFC	TEFC	TEFC	TEFC
PHASE	3	3	1	3	3
RPM @ 60 HZ	3450	3450	3600	3450	3450
NEMA FRAME SIZE	145TC	184TC	184TC	215TC	215TC
VOLTAGE	208-230/460	208-230/460	230	208-230/460	208-230/460
EFF@FULL LOAD	85.5	87.5	88.5	88.5	88.5

TANK WALL GUIDE FOR BANJO TANK FITTINGS

PART NO	DESCRIPTION	MAX TANK WALL THICKNESS	AVAILABLITY
BF075	¾" Blind Hole Tank Flange	.250	Stock
BF075BD	¾" x 1" Bottom Drain Flange EPDM Thread	.250	Stock
BF075BDV	¾" x 1" Bottom Drain Flange FKM (viton type) Thread	.250	Stock
BF075V	¾" Bolted Tank Flange FKM (viton type) Thread	.250	Stock
BF100	1" Blind Hole Bolted Tank Flange	.250	Stock
BF100BD	1" x 1" Bottom Drain Flange EPDM Thread	.250	Stock
BF100BDV	1" x 1" Bottom Drain Flange FKM (viton type) Thread	.250	Stock
BF100V	1" Bolted Tank Flange FKM (viton type) Thread	.250	Stock
BF125	1¼" Bolted Tank Flange	.250	Stock
BF125BD	1¼" x 1" Bottom Drain Flange EPDM Thread	.270	Stock
BF125BDV	1¼" x 1" Bottom Drain Flange FKM (viton type) Thread	.270	Stock
BF150	1½" Bolted Tank Flange	.280	Stock
BF150BD	1½" x 2" Bottom Drain Flange EPDM Thread	.220	Stock
BF150BDV	1½" x 2" Bottom Drain Flange FKM (viton type) Thread	.220	Stock
BF150V	1½" Bolted Tank Flange FKM (viton type) Thread	.280	Stock
BF200	2" Blind Hole Bolted Tank Flange	.280	Stock
BF200BD	2" x 2" Bottom Drain Flange EPDM Thread	.220	Stock
BF200BDV	2" x 2" Bottom Drain Flange FKM (viton type) Thread	.220	Stock
BF205BD	2" Bottom Drain Fittings with 3¼" Bolts	.750	Non-Stock (1-2 week delivery)
BF220	2" Full Port Bolted Tank Flange	.250	Stock
BF220BD	2" x 2" Full Port Bottom Drain Flange EPDM Thread	.250	Stock
BF220BDV	2" x 2" Full Port Bottom Drain Flange FKM (viton type) Thread	.250	Stock
BF220V	2" Full Port Bolted Tank Flange FKM (viton type) Thread	.250	Stock
BF222BD	2" Full Port Bolted Flange with 3¼" All Thread Bolt	.750	Non-Stock (1-2 week delivery)
BF223	2" Full Port Bolted Flange with 3" Bolts	1.000	Non-Stock (1-2 week delivery)
BF223BD	2" x 2" Flange with 3" All Thread Bolt	1.060	Non-Stock (1-2 week delivery)
BF224	2" Full Port Bolted Flange with 4" Bolts	1.810	Non-Stock (1-2 week delivery)
BF230	2" Bolted Flange with 3" All Thread Bolt	1.060	Non-Stock (1-2 week delivery)
BF235	2" Bolted Flange with 3½" All Thread Bolt	1.310	Non-Stock (1-2 week delivery)
BF235BD	2" Bottom Drain Flange with 3½" Bolts	1.000	Non-Stock (1-2 week delivery)
BF300	3" x 3" Bolted Tank Flange	.500	Stock
BF300BD	3" x 3" Bottom Drain Flange EPDM Thread	.500	Stock
BF300BDV	3" x 3" Bottom Drain Flange FKM (viton type) Thread	.500	Stock
BF300V	3" Bolted Tank Flange with FKM (viton type) Thread	.500	Stock
BF330	3" Bolted Tank Flange with 3" All Thread Bolt	.750	Non-Stock (1-2 week delivery)
BF335	3" Bolted Tank Flange with 3½" All Thread Bolt	1.250	Non-Stock (1-2 week delivery)
BF335BD	3" Bottom Drain Bolted Tank Flange with 3½" All Thread Bolt	.750	Non-Stock (1-2 week delivery)
MBF100	1" Bolted Manifold Tank Flange with 2¼" Bolts	.280	Stock
MBF100BD	1" Bottom Drain Manifold Bolted Tank Flange EPDM Thread	.280	Stock
MBF100BDV	1" Bottom Drain Manifold Bolted Tank Flange FKM (viton type) Thread	.280	Stock
MBF100V	1" Bolted Tank Flange Full Port with FKM (viton type) Thread	.280	Stock
MBF105	1" Bolted Manifold Tank Flange with 2¾" Bolts	.750	Non-Stock (1-2 week delivery)
MBF106	1" Bolted Manifold Tank Flange with 3¼" Bolts	.750	Non-Stock (1-2 week delivery)
MBF200	2" Bolted Manifold Tank Flange with 2½" Bolts	.210	Stock
MBF200BD	2" Bottom Drain Manifold Tank Flange	.500	Stock
MBF200V	2" Standard Port Flange x 2" Female FKM (viton type) Thread	.210	Stock
MBF205BD	2" Bottom Drain Tank Flanged Tank Fitting with 3¼" Bolt	.650	Non-Stock (1-2 week delivery)
MBF220	2" Full Port Manifold Flange with 2½" Bolts	.320	Stock
MBF220BD	2" Full Port Manifold Bottom Drain Flange EPDM Thread	.550	Stock
MBF220BDV	2" Full Port Manifold Bottom Drain Flange FKM (viton type) Thread	.550	Stock
MBF222	2" Full Port Manifold Tank Flange with 3¼" Bolts	1.050	Non-Stock (1-2 week delivery)
MBF222BD	2" Full Port Manifold Bottom Drain Tank Flange with 3¼" Bolts	1.050	Non-Stock (1-2 week delivery)
MBF223	2" Full Port Manifold Bolted Tank Flange with 3" Bolts	.800	Non-Stock (1-2 week delivery)
MBF235	2" Manifold Tank Flange with 3½" Bolts	1.320	Non-Stock (1-2 week delivery)
MBF229	2" Full Port Manifold Tank Flange with 3½" Bolts	1.320	Non-Stock (1-2 week delivery)
MBF300	3" Bolted Manifold Tank Flange EPDM Thread	.500	Stock
MBF300BD	3" Bottom Drain Manifold Tank Flange EPDM Thread	.500	Stock
MBF300BDV	3" Bottom Drain Manifold Bolted Tank Flange FKM (viton type) Thread	.500	Stock
MBF335	3" Bolted Manifold Tank Flange with 3½" Bolts	1.250	Non-Stock (1-2 week delivery)
MBF335BD	3" Bolted Manifold Tank Flange with 3¼" Bolts	.500	Non-Stock (1-2 week delivery)

Part Number	Pages	Weights	
12034	145, 153, 159, 177, 187	N/A	
12099	141, 143, 147, 149, 151, 155, 157, 171, 173	0.03	
12155	145, 153, 159	N/A	
12705	145, 153, 159, 175, 177, 187, 189	0.24	
12709	145, 153, 159, 175, 177, 187, 189	N/A	
12717	145, 153, 159, 175, 177, 187, 189	0.01	
12720	145, 153, 159	0.03	
12723	135, 27	0.02	
12724	135, 27	0.01	
12725	145, 153, 159	0.02	
12754	145, 153, 159	0.01	
12756	147, 173	N/A	
12766	145, 153, 159, 175	N/A	
12772	145, 153	0.20	
12777	131, 135, 145, 153, 159, 161, 163, 165, 167, 169, 175, 177, 179, 181, 183, 187, 189, 193, 195, 197, 199, 201, 83	0.02	
12884	161, 163	0.03	
12900	145, 153, 159	0.02	
12901	145, 153, 159, 175, 177, 187, 189, 39, 53, 61	0.01	
13000	151, 155, 157	0.75	
13055	159, 177, 187, 189	161.00	
13702	151, 155, 157, 159	1.38	
13712	155, 157, 159	4.00	
13719	145, 153, 159, 175, 177, 187, 189	N/A	
13765	185	0.03	

Part Number	Pages	Weights	
13766	159, 187	N/A	
13772	159	0.25	
13777	138, 159, 175, 177, 179, 181, 183, 185, 187, 189, 191, 199, 201, 85	0.03	
13778	131, 138, 159, 175, 177, 179, 181, 183, 185, 187, 189, 191, 199, 201, 83, 85	0.02	
13999	151, 155, 157	0.25	
14766	159	N/A	
15000	171, 173	2.05	
15022	161, 163, 165, 167, 169, 193, 195, 197	0.98	
15025	185	N/A	
15035	159	0.35	
15055	175	N/A	
15702	171, 173, 175, 177	8.36	
15703	171, 173	14.71	
15712	171, 173	27.34	
15751	171, 173	0.02	
15752	171, 173	0.01	
15772	175, 177	1.48	
15999	171, 173	0.32	
16000	191	5.00	
16001	185, 191	N/A	
16002	191	N/A	
16003	185	5.45	
16011	185, 191	0.02	
16019	185, 191	1.00	
16099	185, 191	N/A	
16702	185, 191	N/A	
16703	191	N/A	
16704	185, 191	N/A	
16706	185, 191	0.77	
16707	191	N/A	
16710	185, 191	0.01	
16712	191	55.20	
16713	185, 191	0.20	
16733	185	53.80	
16743	191	N/A	
16751	185, 191	N/A	
16752	185, 191	0.02	
16765	185, 191	0.07	
16772	191	N/A	
16773	185, 191	N/A	
16774	185	2.75	
16775	191	0.03	
16901	145, 159, 177, 185, 187, 189, 191	0.03	
17000	163, 165, 167, 169	1.47	
17001	161, 169	1.38	

Part Number	Pages	Weights	
17002	163, 165, 167, 169	2.01	
17003	161, 169	1.70	
17004	161, 163	6.50	
17005	161, 163, 193	0.35	
17006	161, 163, 193	0.25	
17007	161, 163, 167, 169, 193, 195, 197	0.24	
17008	161, 163, 167, 169	2.00	
17010	161, 163, 165, 167, 169, 183, 193, 195, 197, 201	0.04	
17011	161, 163, 167, 169	0.85	
17013	161, 163, 165, 167, 169	0.03	
17014	193, 195, 197	0.03	
17016	161, 163, 165, 167, 169	0.03	
17017	193, 195, 197	0.25	
17018	161, 163, 165, 167, 169, 193, 195, 197	0.01	
17019	161, 163, 165, 167, 169, 193, 195, 197, 39, 53	0.02	
17023	161, 163, 193	0.32	
17024	161, 163, 167, 169, 193, 195, 197	0.32	
17026	161, 163, 167, 169	24.00	
17028	161, 163, 169	0.16	
17029	187	4.25	
17032	165	0.04	
17033	161, 163	1.50	
17035	161, 163, 167, 169	0.18	
17040	161, 163, 193	0.03	
17042	161, 163, 167, 169, 193, 195, 197	0.03	
17046	161, 163, 167	7.40	
17056	169, 197	0.43	
17100	161, 163	4.00	
17123	161, 163, 165, 193	0.32	

Part Number	Pages	Weights	
17130	161, 163, 167, 169	0.03	
17202	165	3.82	
17208	165	2.00	
17226	165	29.00	
17235	165	0.35	
17242	165	0.25	
17406	167, 195	0.38	
17408	167	N/A	
17446	167	N/A	
17449	167, 189, 195	N/A	
17701	167, 195	N/A	
17704	167, 179, 181, 185, 191, 195	0.50	
17901	185	N/A	
18001	179, 181, 183	65.65	
18004	179, 181, 183	1.53	
18008	179, 181, 183	3.50	
18009	179, 181, 183	0.03	
18012	179, 181, 183	3.15	
18013	179, 181, 183	0.50	
18021	179, 181, 183, 199, 201	0.21	
18023	179, 183	4.35	
18025	167, 179, 183	0.39	
18026	179	9.60	
18027	185, 191, 199	0.09	
18029	179, 183, 201	0.63	
18030	179, 199	0.07	
18032	179, 199	0.03	
18033	175, 177, 179, 181, 183, 185, 187, 189, 191, 199, 201	1.25	
18034	175, 177, 179, 181, 183, 185, 187, 189, 191, 199, 201	0.00	
18035	179	2.75	
18042	199, 201	0.50	
18044	199, 201	0.02	
18048	179	14.00	
18049	179, 183	20.60	
18055	179, 183, 201	0.75	
18056	183, 201	N/A	
18058	167, 183, 189, 195, 201	0.03	
18059	183, 201	0.03	
18100	179, 183	7.20	

Part Number	Pages	Weights	
18106	179, 181, 183	0.07	
18129	167, 179, 181, 195,	0.57	
	199		
18206	181	N/A	
18218	179, 181, 183, 199, 201	0.04	
18435	191	N/A	
18500	179, 181, 185, 191, 199	13.00	
18502	179, 183, 189, 201	3.40	
18504	179, 199	1.82	
18511	185, 191	N/A	
18512	185, 191	0.06	
18600	183	N/A	
18700	179, 192, 198	3.00	
18702	179, 192, 198	1.63	
19702	187, 189	9.01	
19766	177, 189	N/A	
19772	187, 189	2.08	
050C	117	0.14	
050D	117	0.16	
050E	117	0.05	
050F	117	0.06	
075ASS	114	0.27	
075BSS	114	0.49	
075C	117	0.15	
075CAP	117	0.13	
075CAP/SS	114	0.49	
075CSS	114	0.54	
075D	117	0.15	
075D3/8	117	0.17	
075DSS	114	0.50	
075E	117	0.06	
075ESS	114	0.42	
075F	117	0.06	
075FSS	114	0.37	
075GXT	118	0.01	
075PL/SS	114	0.17	
100125CAP	117	0.27	
100125PL	117	0.06	
100A	117	0.09	
100ASS	114	0.32	
100B	117	0.29	
100BSS	114	0.71	
100C	117	0.27	
100CAP/SS	114	0.66	
100CSS	114	0.73	
100D	117	0.31	
100DSS	114	0.75	
100E	117	0.10	
100ESS	114	0.58	
100F	117	0.11	
100FSS	114	0.58	
100G	110, 118	0.20	
100GB	115, 118	1.20	
100GV	110, 115, 118	0.20	
100GXT	118	0.01	
100K	115, 118	0.13	

Part Number	Pages	Weights	
100P	115, 118, 95	0.15	
100PL/SS	114	0.27	
100RING	115, 118, 95	0.12	
12000A	143, 147,	0.75	
	149, 151		
12000AV	143, 147, 149, 151	0.90	
12003A	141, 143, 147	0.75	
12003AV	141, 143	#N/A	
12049E	177	N/A	
12055E	177	N/A	
12201W	159	N/A	
12202W	145, 153, 159	N/A	
12214A	169, 197	0.03	
125A	117	0.10	
125B	117	0.30	
125C	117	0.29	
125D	117	0.31	
125E	117	0.11	
125F	117	N/A	
12702A	141, 143, 145, 147, 149, 153	1.13	
12703A	141, 143, 147, 149, 151, 155, 157	2.07	
12703AW	159	N/A	
12707W	145, 153, 159	N/A	
12711A	141, 147	3.31	
12712A	143, 145, 147, 149	3.25	
12715A	175, 177, 187, 189	0.04	
12719A	145, 153, 159, 175, 177, 187, 189	0.03	
12774VA	145, 159, 187	0.01	
12775A	145, 153	0.03	
12882A	161, 163, 165, 175, 193	7.60	
12882R	161, 163	6.13	
12883B	161, 163	0.20	
12883R	161, 163	0.88	
12902A	145, 153, 159, 175, 177, 187, 189	0.05	
12999A	141, 143, 147, 149, 151	0.25	
12999AV	141, 143, 149, 151	0.32	
12999VA	147	N/A	
13000V	151, 155, 157	0.90	
13778V	133	N/A	
13999V	151, 155, 157	0.35	
150(200)K	118	0.13	

Part Number	Pages	Weights	
150(200)K6	115	N/A	
15000V	171, 173	N/A	
150125A	117	0.19	
150125B	117	0.26	
150125C	117	0.27	
150125D	117	0.31	
150125E	117	0.16	
150125F	117	0.18	
15035E	145, 153, 175, 177, 181, 187, 189	N/A	
150A	117	0.18	
150A90	120	0.24	
150ASS	115	0.75	
150B	117	0.57	
150BSS	115	1.38	
150C	117	0.57	
150C90	120	0.62	
150CAP	117	0.54	
150CAP/SS	115	1.28	
150CSS	115	1.54	
150D	117	0.59	
150D90	120	0.65	
150DSS	115	1.55	
150E	117	0.21	
150ESS	115	1.23	
150F	117	0.21	
150F90	120	0.27	
150FSS	115	1.41	
150G	110, 118, 81	0.30	
150GB	115, 118	0.02	
150GV	110, 115, 118, 81	0.30	
150GXT	118	0.02	
150GXTV	118	0.03	
150P-3	140	40.00	
150P-3-V	140	16.00	
150PB	140	52.00	
150PB-V	140	16.00	
150PBI	160	49.00	
150PEO	146	81.00	
150PI-3	160	76.60	
150PIHY	168	0.14	
150PL	117	0.16	
150PL/SS	115	0.76	
150PO	140	47.00	
150PO-V	140	9.00	
150POI	160	47.00	
150POICF5/8	160	47.00	
150POICF5/8-4.1	160	47.00	
150POICF7/8	160	47.00	
150POICF7/8-4.1	160	47.00	
150POICF7/8-4.6	160	47.00	
150RING	115, 118	0.25	
150SBS	164, 166, 172, 179, 181, 194	0.25	
15201W	175, 177	N/A	
15703W	175, 177	N/A	
15999V	171, 173	0.32	
16704A	185	N/A	
16773A	185	N/A	
17000SS	193, 195, 197	1.57	
17002SS	193, 195, 197	2.32	
17004SS	193	7.00	

Part Number	Pages	Weights	
17008-4.1	161, 163	1.81	
17008-4.1SS	193	N/A	
17008-4.6	161, 163	1.90	
17008-4.6SS	193	1.88	
17008SS	193, 195, 197	2.00	
17009B	161, 163, 165, 167, 169, 193, 195, 197	0.02	
17011SS	193, 195, 197	0.82	
17026SS	193, 195, 197	32.60	
17035SD	161, 163, 169	0.13	
17035SS	193, 195, 197	0.18	
17046SS	193, 195	8.80	
17049A	169	10.85	
17049ASS	197	N/A	
17055A	169, 197	N/A	
17056E	177	N/A	
17100SS	193	3.75	
17130SS	193, 195, 197	0.02	
17200A	165	20.60	
17201A	165	31.60	
17206A	165	0.55	
17408SS	195	2.00	
17446SS	195	N/A	
17600A	169	17.50	
18001SS	199, 201	N/A	
18004SS	199, 201	1.65	
18008SS	199, 201	4.00	
18010SS	169, 177, 179, 181, 183, 197, 199, 201	0.03	
18012SS	199, 201	4.35	
18023-1.125	179	4.07	
18023-1.125SS	199	4.25	
18023SS	199, 201	4.32	
18025SD	179, 183	0.32	
18025SS	195, 199, 201	0.25	
18026SS	199	10.00	
18048SS	199	N/A	
18049SS	201	N/A	
18055H	189	N/A	
18100SS	199, 201	N/A	
18100W	181	9.20	
18106SS	199, 201	0.02	
18135A	187	N/A	
18135B	187	N/A	
18200A	181	31.60	
18202A	181	5.00	
18203A	181	13.20	
18600SS	201	N/A	
19001H	189	N/A	
19201W	187, 189	N/A	
19703W	187, 189	17.30	
200150C	119	0.67	
200A	117	0.30	
200A90	120	0.45	
200ASS	115	0.99	
200B	117	0.64	
200B90	120	0.82	

Part Number	Pages	Weights	
200BSS	115	1.85	
200C	117	0.69	
200C90	120	0.78	
200CAP	107, 117	0.60	
200CAP/SS	115	1.69	
200CAPSH	107, 117	0.57	
200CSS	115	2.38	
200D	117	0.66	
200D90	120	0.88	
200DSS	115	1.97	
200E	117	0.29	
200ESS	115	2.06	
200F	117	0.31	
200F45	120	0.35	
200F90	120	0.42	
200FF	118	0.35	
200FSS	115	1.55	
200G	105, 110, 118, 81	0.03	
200GB	115, 118	0.02	
200GV	105, 110, 115, 118, 81	0.03	
200GXT	118	0.02	
200GXTV	118	0.07	
200KL	119	0.25	
200P	115, 118, 89, 91, 97, 99	0.17	
200P-3	142	40.00	
200P-3-V	142	40.00	
200P6PRO	142	50.00	
200P6PROE	142	#N/A	
200P6PROSS	192	N/A	
200P6PROV	142	48.00	
200P6PROW	144	48.00	
200PB	142	18.00	
200PB-SS	192	52.00	
200PB-V	142	18.00	
200PBI	162	56.00	
200PBW	144	22.00	
200PEO	146	N/A	
200PH-5	142	50.00	
200PH-5E	142	56.00	
200PH-5V	142	N/A	
200PH5-SS	192	105.00	
200PH5W	144	53.00	
200PH6	142	51.20	
200PHA	148	N/A	
200PHY	148	25.00	
200PHYSS	196	N/A	
200PHYW	148	#N/A	
200PI-3	162	77.20	
200PI6PRO	162	83.00	
200PIH-5	162	105.00	
200PIH5E	162	82.00	
200PIHA	168	N/A	
200PIHY	168	48.00	
200PKL	119	0.06	
200PL	117	0.21	
200PL/SS	115	0.99	
200PO	142	9.00	
200PO-SS	192	47.00	
200PO-V	142	N/A	
200POI	162	52.50	
200POICF5/8	162	47.00	
200POICF5/8-4.1	162	47.00	
200POICF5/8-4.6	162	47.00	
200POICF7/8	162	47.00	
200POICF7/8-4.1	162	47.00	

Part Number	Pages	Weights	
200POICF7/8-4.6	162	47.00	
200POSSCF5/8	192	47.00	
200POSSCF7/8	192	90.00	
200SBS	164, 166, 172, 179, 181, 194	0.25	
201B	117, 119	0.63	
201CAPSH	107	0.50	
201FPT	107	0.03	
201PBIW	164	58.00	
201PI6PROW	164	98.00	
201PIH5W	164	94.00	
201PIH6W	164	#N/A	
201POIW	164	59.00	
202CAP	107	0.26	
205PB	142	16.00	
205PB-V	142	16.00	
205PO	142	9.00	
205PO-V	142	9.00	
211FPT	107	0.03	
220FSWP90	120	N/A	
222PBI	170	70.00	
222PI6PRO	170	107.00	
222PIE5	172	180.00	
222PIE51	172	190.00	
222PIH5	170	103.00	
222PIH5E	170	110.00	
222PIH6	170	110.00	
222PIHY	170	N/A	
222POI	170	60.00	
225POI	170	60.00	
231EPA	106	0.10	
231MPT	106	0.03	
231MPTBN	106	0.08	
234PE3SS	194	145.00	
234PE51SS	194	180.00	
234PE5SS	194	185.00	
234PIE3	166	140.00	
234PIE5	166	175.00	
234PIE51	166	200.00	
234POI	166	54.00	
234PPE5	146	135.00	
234PPE51	146	142.80	
234PPE51V	146	145.00	
234PPE5V	146	123.00	
250CAP	117	0.68	
250G	118	0.35	
250PL	117	0.42	
300A	118	0.48	
300ASS	115	1.91	
300B	118	1.17	
300BSS	115	3.30	
300C	118	1.40	
300CAP	118	1.07	
300CAP/SS	115	3.61	
300CSS	115	5.06	
300D	118	1.19	
300DSS	115	4.54	
300E	118	0.78	
300ESS	115	4.62	
300F	118	0.57	
300F200F	118	0.57	
300FF	118	0.60	
300FSS	115	3.81	
300G	110, 118, 81	0.06	
300GB	115, 118	0.04	
300GV	110, 115, 118, 81	0.06	

Part Number	Pages	Weights	
300GVXT	118	0.07	
300GXT	118	0.04	
300K	118, 133	0.31	
300K6	115	0.23	
300MP	115	0.03	
300P	118, 133	0.12	
300P11PRO	154	81.00	
300P11PROW	158	67.00	
300P6PROW	158	N/A	
300PB	154	20.00	
300PB-SS	198	100.00	
300PBI	178	125.00	
300PBW	158	26.00	
300PH-6	154	50.00	
300PH11-SS	198	150.00	
300PH11W	158	102.60	
300PH13SS	198	150.00	
300PH13W	158	102.80	
300PH6W	158	56.00	
300PHY	156	26.00	
300PHYSS	200	140.00	
300PHYW	156	#N/A	
300PI11PRO	178	163.00	
300PIH-11	178	192.00	
300PIH-8	178	195.00	
300PIH13	178	210.00	
300PIHY	182	140.00	
300PL	118	0.43	
300PL/SS	115	1.98	
300PO	154	12.00	
300PO-SS	198	115.00	
300PO-SSCF	198	97.00	
300POI	178	106.00	
300POICF	178	90.00	
300SBS	164, 166, 172, 179, 181, 194	0.25	
301PBIW	180	135.00	
301PIH13W	180	218.00	
301POIW	180	130.00	
303B	118, 119	1.50	
303B200A	119	1.42	
303C	118, 119	1.66	
333PBI	184	185.00	
333PIE15	184	242.00	
333PIH13	184	285.00	
333POI	184	N/A	
400A	118	1.31	
400ASS	115	3.70	
400B	118	2.03	
400BSS	115	5.26	
400C	118	2.39	
400CAP	118	1.44	
400CAP/SS	115	5.11	
400CSS	115	6.74	
400D	118	2.07	
400DSS	115	6.96	
400E	118	2.11	
400ESS	115	6.53	
400F	118	1.47	
400FSS	115	6.27	
400G	118	0.06	
400GB	115, 118	0.07	
400GV	115, 118	0.19	
400GXT	118	0.07	
400PL	118	1.11	
400PL/SS	115	3.42	
433PBI	190	185.00	

Part Number	Pages	Weights	
444PBI	190	175.00	
444PI23	190	N/A	
444PIH24	190	345.00	
444POI	190	N/A	
60FDIN	107	0.05	
75A1/2	117	0.07	
75A1/2/SA	120	0.07	
75A1/4	117	0.08	
75A1/4/SA	120	0.08	
75A3/4	117	0.05	
75A3/4/SA	120	0.05	
75A3/8	117	0.07	
75A3/8/SA	120	0.07	
75B1/2	117, 120	0.14	
75B3/4	117, 120	0.14	
75G	118	0.10	
75GB	115, 118	0.90	
75GV	115, 118	0.10	
75K	115, 118	0.05	
75P	115, 118	0.04	
75PL	117	0.05	
A020V	93	N/A	
A203V	153, 175, 177, 189	N/A	
A232V	61	N/A	
A238V	61	N/A	
AF100	113	0.30	
AF100G	113	0.06	
AF100GV	113	0.06	
AF150	113	0.43	
AF150G	113	0.08	
AF150GV	113	0.08	
AF200	113	0.62	
AF200G	113	0.17	
AF200GV	113	0.17	
AF300	113	1.17	
AF300G	113	0.17	
AF300GV	113	0.17	
AF400	113	1.54	
AF400G	113	0.45	
AF400GV	113	0.45	
AFB100	113	0.28	
AFB150	113	0.47	
AFB200	113	0.69	
AFB300	113	1.38	
AFB400	113	1.95	
B0516650	61	N/A	
BANJOMAN	108, 122	N/A	
BC090	122	0.06	
BC114	122	0.05	
BEM3	167, 195	N/A	
BEM5	167, 195	N/A	
BEM51	167, 195	N/A	
BF075	108	0.82	
BF075BD	109	0.88	
BF075BDV	109	0.85	
BF075V	108	0.80	
BF100	108	0.82	
BF100BD	109	0.90	
BF100BDV	109	0.85	
BF100GE	108, 109	0.07	
BF100GRE	109	0.01	
BF100GRV	109	0.01	
BF100GV	108, 109	0.06	
BF100V	108	0.80	
BF107	61	N/A	
BF125	108	0.82	
BF125BD	109	0.82	

Part Number	Pages	Weights	
BF125BDV	109	0.85	
BF150	108	1.17	
BF150BD	109	1.25	
BF150BDV	109	1.20	
BF150V	108	1.20	
BF200	108	1.07	
BF200BD	109	1.20	
BF200BDV	109	1.20	
BF200GE	108, 109	0.05	
BF200GFE	109	0.02	
BF200GFV	109	0.05	
BF200GV	108, 109	0.05	
BF200V	108	1.07	
BF207	177, 189	N/A	
BF220	108	1.45	
BF220BD	109	1.50	
BF220BDV	109	1.38	
BF220GE	108, 109	0.02	
BF220GV	108, 109	0.08	
BF220V	108	0.06	
BF300	108	2.13	
BF300BD	109	2.25	
BF300BDV	109	2.25	
BF300GE	108, 109	0.20	
BF300GFE	109	0.02	
BF300GFV	109	0.02	
BF300GV	108, 109	0.10	
BF300V	108	2.00	
BW220SWP90SS	79	0.75	
CAP025	124	0.03	
CAP038	124	0.03	
CAP050	124	0.06	
CAP075	124	0.05	
CAP100	124	0.09	
CAP125	124	0.13	
CAP150	124	0.12	
CAP200	124	0.25	
CAP300	124	0.57	
CPLG025	123	0.03	
CPLG038	123	0.03	
CPLG050	123	0.09	
CPLG075	123	0.11	
CPLG100	123	0.13	
CPLG125	123	0.19	
CPLG150	123	0.30	
CPLG200	123	0.34	
CPLG300	123	0.82	
CR025	124	0.04	
CR038	124	0.05	
CR050	124	0.13	
CR075	124	0.35	
CR100	124	0.27	
CR125	124	0.73	
CR150	124	0.74	
CR200	124	0.75	
CTS200AR	102	0.66	
CTS200D	102	0.86	
CV100MT	28	0.18	
CV10175	145, 153, 159, 175, 177, 187, 189	0.20	
CV221	28	N/A	
CV300	28	1.45	
DB20153M	89, 91	N/A	
DB20255	89, 91	0.13	
DB20258	89, 91, 97, 99	0.05	

Part Number	Pages	Weights	
DB20281	101, 89, 91, 97, 99	0.02	
DB20288	89, 91	0.02	
DB20290	89, 91	N/A	
DB20294	89, 91	N/A	
DM100ABSS	94	3.50	
DM100ASS	94	3.50	
DM100CAP	95	0.20	
DM100DBSS	94	3.75	
DM100DBSSE	94	3.75	
DM100DBSST	94	3.75	
DM100DSS	94	3.75	
DM100DSSE	94	3.75	
DM100DSST	94	3.75	
DM100K	95	0.01	
DM100PL	95	0.25	
DM10151SS	95	N/A	
DM10153FSS	95	0.20	
DM10153MSS	95	0.25	
DM10154SS	95	N/A	
DM10155SS	95	N/A	
DM101SS	95	0.57	
DM10254FSS	95	0.70	
DM10254MSS	95	N/A	
DM10255SS	95	N/A	
DM10256BSS	95	N/A	
DM10256SS	95	N/A	
DM10257BSS	95	N/A	
DM10257SS	95	N/A	
DM10258	95	N/A	
DM10281	95	0.01	
DM10288SS	95	0.02	
DM10289SS	95	0.02	
DM10294A	95	0.02	
DM10295A	95	0.02	
DM10296	95	N/A	
DM102SSE	95	0.50	
DM102SST	95	N/A	
DM102SSV	95	0.57	
DM10300	95	0.07	
DM150A	88	2.20	
DM150AB	88	2.20	
DM150ABE	88	N/A	
DM150ABSS	96	N/A	
DM150ABT	88	N/A	
DM150AD	88	6.35	
DM150AE	88	2.75	
DM150ASS	96	6.35	
DM150AT	88	2.20	
DM150D	88	2.75	
DM150DB	88	2.20	
DM150DBE	88	N/A	
DM150DBSS	96	6.90	
DM150DBSSE	96	6.90	
DM150DBSST	96	6.90	
DM150DBT	88	N/A	
DM150DE	88	2.82	
DM150DSS	96	6.90	
DM150DSSE	96	6.90	
DM150DSST	96	6.90	
DM150DT	88	N/A	
DM15151SS	97, 99	N/A	
DM15153SS	97, 99	N/A	
DM15154FSS	97, 99	N/A	
DM15154MSS	97, 99	N/A	
DM15154SS	97, 99	N/A	
DM15155SS	97, 99	N/A	
DM15204SS	97, 99	N/A	

Part Number	Pages	Weights	
DM15255FSS	97, 99	N/A	
DM15255MSS	97, 99	N/A	
DM15256FBSS	99	N/A	
DM15256FSS	99	N/A	
DM15256MBSS	99	N/A	
DM15256MSS	99	N/A	
DM15257FBSS	97	N/A	
DM15257FSS	97	N/A	
DM15257MBSS	97	N/A	
DM15257MSS	97	N/A	
DM15288SS	97, 99	N/A	
DM15289SS	97, 99	2.25	
DM200A	90	2.20	
DM200AB	90	2.20	
DM200ABSS	98	6.20	
DM200ACAP	97, 99	N/A	
DM200ACF	74	3.15	
DM200AD	90	6.20	
DM200AE	90	2.75	
DM200APL	97, 99	0.50	
DM200ASS	98	6.20	
DM200AT	90	2.20	
DM200CAP	89, 91	0.50	
DM200D	90	2.75	
DM200DB	90	2.20	
DM200DBSS	98	6.90	
DM200DBSSE	98	6.90	
DM200DBSST	98	6.90	
DM200DCF	74	2.75	
DM200DE	90	3.00	
DM200DSS	98	6.90	
DM200DSSE	98	6.90	
DM200DSST	98	6.90	
DM200DT	90	N/A	
DM200KX	89, 91, 97, 99	0.20	
DM200PL	89, 91	0.43	
DM20153F	89, 91	0.25	
DM20153M	89, 91	0.32	
DM201SS	97, 99	1.24	
DM20200A	89, 91	0.25	
DM20200D	89, 91	0.27	
DM20254	89, 91	N/A	
DM20254F	89, 91	0.50	
DM20254T	89, 91	N/A	
DM20256	91	N/A	
DM20256B	91	N/A	
DM20257	89	N/A	
DM20257B	89	N/A	
DM20265	89, 91	N/A	
DM20289	89, 91	N/A	
DM20294A	89, 91, 97, 99	0.03	
DM20295A	89, 91, 97, 99	0.03	
DM20296	89, 91, 97, 99	N/A	
DM202SSE	97, 99	1.25	
DM202SST	97, 99	1.30	
DM202SSV	97, 99	1.32	
DM20300	89, 91, 97, 99	0.13	
DM220A	2	#N/A	
DM220ABSS	100	N/A	
DM220AD	2	#N/A	
DM220ASS	100	N/A	
DM220CAP	101	N/A	
DM220D	2	#N/A	

Part Number	Pages	Weights	
DM220DBSS	100	7.00	
DM220DBSSE	100	N/A	
DM220DSS	100	9.80	
DM220DSSE	100	N/A	
DM220DSST	100	N/A	
DM220PL	101	N/A	
DM221SS	101	0.45	
DM222SS	101	0.47	
DM25001	101	N/A	
DM25002	101	N/A	
DM25004	101	N/A	
DM25009	101	N/A	
DM25010	101	N/A	
DM25010A	101	N/A	
DM25018	101	N/A	
DM25018A	101	N/A	
DM25020	101	N/A	
DM25151SS	101	N/A	
DM25153SSF	101	N/A	
DM25153SSM	101	N/A	
DM25154SS	101	N/A	
DM25155SS	101	N/A	
DM25204SS	101	N/A	
DM25254FSS	101	N/A	
DM25254MSS	101	N/A	
DM25255SSH	101	N/A	
DM25255SSHF	101	N/A	
DM25256SS	101	N/A	
DM25258FV1	101	N/A	
DM25258FV2	101	N/A	
DM25288FSS	101	N/A	
DM25288MSS	101	N/A	
DM25289SS	101	N/A	
DM25294	101	N/A	
DM25294T	101	N/A	
DM300ABFP	92	N/A	
DM300ACF	74	N/A	
DM300AFP	92	4.80	
DM300CAP	93	N/A	
DM300DBFP	92	N/A	
DM300DCF	74	N/A	
DM300DFP	92	8.40	
DM300PL	93	N/A	
DM35006	93	N/A	
DM35009	93	N/A	
DM35010	93	N/A	
DM35013	93	N/A	
DM35153F	93	N/A	
DM35153M	93	N/A	
DM35254F	93	N/A	
DM35254M	93	N/A	
DM35255	93	N/A	
DM35258	93	N/A	
DM35281	93	N/A	
DM35288F	93	N/A	
DM35288M	93	N/A	
DM35289	93	N/A	
DM35294	93	N/A	
DMMT201A	90	2.50	
DMMT201AE	90	2.50	
DMMT20256	91	N/A	
DP02063	93	N/A	
DPCF100	87	0.50	
DPCM100	87	0.25	
DPCMT100	87	0.27	
EL025-90	125	0.03	
EL038-90	125	0.04	
EL050-90	125	0.07	

Part Number	Pages	Weights	
EL075-90	125	0.10	
EL100-45	125	0.14	
EL100-90	125	0.15	
EL125-90	125	0.23	
EL150-90	125	0.33	
EL200-90	125	0.44	
EL300-90	125	1.21	
EV075	32	4.94	
EV075BL	40	4.96	
EV075BLXR1	41	4.20	
EV075SL	40	4.94	
EV075SLXR1	41	4.20	
EV075XR1	33	N/A	
EV100BL	40	4.50	
EV100BLXR1	41	N/A	
EV100FP	32	4.94	
EV100SL	40	4.50	
EV100SLXR1	41	N/A	
EV100XR1	33	N/A	
EV10210	33, 41, 51, 55, 57	0.25	
EV125	32	4.88	
EV125BL	40	4.88	
EV125BLXR1	41	N/A	
EV125SL	40	6.48	
EV125SLXR1	41	N/A	
EV125XR1	33	1.39	
EV150	34	6.36	
EV150BL	42	6.36	
EV150BLXR1	43	N/A	
EV150SL	42	6.48	
EV150SLXR1	43	N/A	
EV150XR1	35	N/A	
EV200	34	6.41	
EV200BL	42	6.41	
EV200BLXR1	43	N/A	
EV200SL	42	8.85	
EV200SLXR1	43	N/A	
EV200XR1	35	N/A	
EV20210	35, 43, 51, 55, 57	0.30	
EV204BLFP	44	8.06	
EV204BLXR1	45	N/A	
EV204FP	36	8.85	
EV204SLFP	44	4.50	
EV204SLXR1	45	N/A	
EV204XR1	37	N/A	
EV25210	37, 45, 51, 55, 57	0.45	
EV300FP	38	12.00	
EV3100	33, 41, 51, 55, 57	2.50	
EV4100	35, 37, 43, 45, 51, 55, 57	3.00	
EVR075	32	4.50	
EVR100FP	32	4.50	
EVR125	32	6.48	
EVR150	34	6.48	
EVR200	34	5.75	
EVR204FP	36	7.00	
EVR3100	33, 41, 51, 55	N/A	
EVR3102	33	N/A	
EVR4100	35, 37, 43, 45, 51, 55	3.75	
EVR4102	35, 37	N/A	
F-IS100	104	1.00	

Part Number	Pages	Weights	
F-ISO11	104	2.20	
FC100	33, 35, 37, 41, 43, 45, 51, 55, 57, 81	0.25	
FC200	81	0.23	
FC220	75, 81	0.25	
FC220B	81	1.37	
FC220TB	81	0.43	
FC300	75, 81	0.34	
FC300B	81	1.76	
FC300TB	81	0.52	
FM100	76	2.75	
GHFT075A	121	0.06	
GHFT075D	121	0.17	
GHFT075MPT	121	0.04	
GHMT075B	121	0.14	
GHMT075F	121	0.05	
GHMT075FPT	121	0.04	
GHMT075MPT	121	0.04	
GHN075	121	0.60	
GP038200	93	N/A	
GP0516300	93	N/A	
HB025	126	0.01	
HB025-038	126	0.01	
HB025-038SS	126	0.07	
HB025-050	126	0.01	
HB025-050SS	126	0.07	
HB025-90	126	0.01	
HB025/038-90	126	0.01	
HB025/050-90	126	0.02	
HB025SS	126	0.04	
HB038	126	0.01	
HB038-025	126	0.02	
HB038-050	126	0.02	
HB038-050SS	126	0.10	
HB038-90	126	0.02	
HB038SS	126	0.09	
HB050	126	0.03	
HB050-025	126	N/A	
HB050-038	126	0.02	
HB050-058SS	126	0.14	
HB050-075	126	0.03	
HB050-075SS	126	0.20	
HB050-90	126	0.03	
HB050/038-90	126	0.02	
HB050/075-90	126	0.04	
HB050SS	126	0.13	
HB075	126	0.04	
HB075-038	126	0.03	
HB075-050	126	0.03	
HB075-050SS	126	0.20	
HB075-058	126	0.04	
HB075-100	126	0.05	
HB075-100SS	126	0.25	
HB075-90	126	0.05	
HB075/050-90	126	0.04	
HB075/100-90	126	0.05	
HB075SS	126	0.20	
HB100	126	0.06	
HB100-075	126	0.06	
HB100-075SS	126	0.30	
HB100-125	126	0.08	
HB100-90	126	0.07	
HB100/075-90	126	0.06	
HB100/125-90	126	0.10	
HB100SS	126	0.30	
HB125	126	0.10	

Part Number	Pages	Weights	
HB125-075	126	0.08	
HB125-100	126	0.09	
HB125-150	126	0.10	
HB125-90	126	0.11	
HB125/100-90	126	0.09	
HB125/150-90	126	0.09	
HB125SS	126	0.50	
HB150	126	0.13	
HB150-100	126	0.09	
HB150-125	126	0.10	
HB150-200	126	0.19	
HB150-90	126	0.23	
HB150/125-90	126	0.16	
HB150SS	126	0.75	
HB200	126	0.20	
HB200-150	126	0.27	
HB200-90	126	0.33	
HB200/150-90	126	0.22	
HB200SS	126	1.13	
HB300	126	0.70	
HB300-90	126	1.05	
HB300SS	126	3.55	
HB400	126	1.60	
HBB20012590	125	0.25	
HBC050075	124	0.05	
HBEL100-90	125	0.05	
HBEL150/100-90	125	0.19	
HBF075	126	0.06	
HBF075-100	126	0.07	
HBF100	126	0.09	
HBT025	127	0.03	
HBT038	127	0.03	
HBT050	127	N/A	
HBT050-038	127	0.02	
HBT050-075	127	0.03	
HBT075	127	0.05	
HBT075-050	127	0.04	
HBT075-100	127	0.06	
HBT100	127	0.07	
HBT100-075	127	0.06	
HBT100-100	127	0.08	
HBT150-100	127	0.21	
HBT150-150	127	0.23	
HBT200	127	0.40	
HBT300	127	1.15	
HM025	127	0.03	
HM038	127	0.03	
HM050	127	0.01	
HM075	127	0.02	
HM100	127	0.04	
HM125	127	0.07	
HM150	127	0.08	
HM200	127	0.22	
HM300	127	0.73	
HSV1000	148, 156, 168, 176, 182, 188, 196, 200	11.00	
HV150	74	0.45	
HV200	74	0.58	
HY1001	183	N/A	
HY1003	149, 169	N/A	
HY1012	183, 189, 201	13.20	
HY1013	157, 169, 177, 197	4.50	
L150B	119	0.58	
L150C	119	0.58	

Part Number	Pages	Weights	
L150CAP	119	0.55	
L150D	119	0.60	
L200B	119	0.64	
L200C	119	0.70	
L200CAP	119	0.62	
L200D	119	0.67	
LEV025PL	3, 31	#N/A	
LEV025PLST	3, 31	#N/A	
LEV038	30	0.55	
LEV038PL	3, 31	#N/A	
LEV038PLST	3, 31	#N/A	
LEV050	30	0.60	
LEV050PL	3, 31	#N/A	
LS050-20	134	0.35	
LS050-40	134	0.35	
LS050-60	134	N/A	
LS050-80	134	0.37	
LS050-B	135	0.22	
LS050B/C1	135	0.98	
LS075-20	134	0.30	
LS075-40	134	0.33	
LS075-60	134	N/A	
LS075-80	134	0.35	
LS075-B	135	0.23	
LS075-C1	135	0.29	
LS075-G	135	0.02	
LS075-GV	135	0.02	
LS075B/C1	135	0.28	
LS100-20	134	0.91	
LS100-40	134	0.90	
LS100-80	134	0.96	
LS100-B	135	0.50	
LS100-C1	135, 83	0.88	
LS100-G	135, 83	0.02	
LS100-GV	135	0.02	
LS100B/C1	135	0.88	
LS120	135, 83	0.07	
LS125-20	134	0.86	
LS125-40	134	0.84	
LS125-80	134	0.90	
LS125-B	135	0.59	
LS125B/C1	135	0.25	
LS125G	135, 83	0.05	
LS140	135, 83	0.07	
LS141G	137, 83	0.06	
LS150	83	0.07	
LS150-06	136	2.42	
LS150-12	136	2.42	
LS150-120	136	2.50	
LS150-12P	136	2.27	
LS150-20	136	2.42	
LS150-20P	136	2.00	
LS150-30	136	2.50	
LS150-50	136	2.50	
LS150-50P	136	1.99	
LS150-80	136	2.50	
LS150-B	137	1.40	
LS150-C	137, 83	0.57	
LS150-G	137, 83	0.03	
LS150-GV	137, 83	0.03	
LS150B/C	137	1.91	
LS180	135, 83	2.12	
LS200-06	136	2.50	
LS200-100	136	2.00	
LS200-12	136	2.33	
LS200-120	136	2.00	
LS200-12P	136	2.20	
LS200-20	136	2.33	

Part Number	Pages	Weights	
LS200-20P	136	2.25	
LS200-30	136	2.42	
LS200-50	136	2.42	
LS200-50P	136	1.91	
LS200-80	136	2.42	
LS200-B	137	1.30	
LS200B/C	137	2.00	
LS206	133, 137, 83	0.30	
LS2100	137, 83	0.09	
LS212	133, 137, 83	0.29	
LS2120	133, 137, 83	0.08	
LS212P	137	0.08	
LS2150	133, 137, 83	0.11	
LS220	133, 137, 83	0.20	
LS220P	137	0.17	
LS230	133, 137, 83	0.17	
LS250	133, 137, 83	0.13	
LS250P	137	0.13	
LS280	133, 137, 83	0.10	
LS300EC	138, 85	0.64	
LS304	138, 85	1.05	
LS308	138, 85	0.92	
LS312	138, 85	4.31	
LS320	138, 85	1.03	
LS350	138, 85	0.92	
LS720	135	0.04	
LS740	135	0.04	
LS760	135	N/A	
LS780	135	0.04	
LSM300-04	138	8.00	
LSM300-08	138	8.00	
LSM300-12	138	8.00	
LSM300-20	138	8.00	
LSM300-50	138	N/A	
LSQ150-06	132	4.17	
LSQ150-12	132	4.17	
LSQ150-120	132	4.17	
LSQ150-20	132	4.17	
LSQ150-30	132	4.17	
LSQ150-50	132	4.17	
LSQ150-80	132	4.17	
LSQ150-B	133	1.89	
LSQ200-06	132	4.17	
LSQ200-12	132	4.17	
LSQ200-120	132	4.17	
LSQ200-20	132	4.17	
LSQ200-30	132	4.17	
LSQ200-50	132	4.17	
LSQ200-80	132	4.17	
LSQ200-B	133	1.75	
LSQ200-C	133	0.26	
LSQ200-G	133	0.05	
LSQ200-GV	133	0.05	
LSQ200-PL	131, 133, 137, 83, 85	0.04	
LSQ200-R	131, 137, 83, 85	0.00	
LSQ200-RV	131, 133, 137	0.02	
LSQ200R1	133	0.02	
LSS300-B	138	21.48	
LSS300-BC	138	24.26	
LSS300-C	138	3.00	
LSS300-G	138	N/A	
LSS300-GV	138	0.07	
LSS300-H	138	0.05	
LSS300-S	138	0.01	
LSS300-SV	138	0.01	

Part Number	Pages	Weights	
LSS306	138	0.30	
LSS308	138	0.38	
LSS312	138	0.35	
LSS320	138	0.80	
LSS330	138	0.79	
LSS350	138	0.83	
LST034G	131, 83	0.02	
LST050B	129	0.07	
LST050BC	129	0.07	
LST050H	129	0.20	
LST075-100	130	0.83	
LST075-16	130	0.78	
LST075-30	130	0.84	
LST075-50	130	0.84	
LST075-80	130	0.83	
LST075-H	131	0.51	
LST075-HB	131	0.78	
LST075H2	129	0.20	
LST100-100	130	0.76	
LST100-16	130	0.75	
LST100-30	130	0.79	
LST100-50	130	0.81	
LST100-80	130	0.78	
LST100-B	131, 83	2.17	
LST100-G	131, 83	0.02	
LST100-GV	131, 83	0.02	
LST100-H	131	0.47	
LST100-HB	131	2.25	
LST1100	131, 83	0.07	
LST116	131, 83	0.07	
LST125-100	130	2.26	
LST125-16	130	2.12	
LST125-30	130	2.22	
LST125-50	130	2.24	
LST125-80	130	2.18	
LST125-H	131	1.15	
LST125-HB	131	2.19	
LST130	131, 83	0.07	
LST150	131, 83	0.07	
LST150-100	130	1.90	
LST150-16	130	2.07	
LST150-30	130	2.12	
LST150-50	130	2.15	
LST150-80	130	2.13	
LST150-B	131, 83	0.22	
LST150-G	131, 83	0.03	
LST150-GV	131, 83	0.03	
LST150-H	131	1.11	
LST150-HB	131	0.26	
LST15100	131, 83	0.27	
LST1516	131, 83	0.20	
LST1530	131, 83	0.17	
LST1550	131, 83	0.15	
LST1580	131, 83	0.10	
LST180	131, 83	0.07	
LST200-04SS	132	16.00	
LST200-06SS	132	16.00	
LST200-100SS	132	16.00	
LST200-10SS	132	16.00	
LST200-16SS	132	16.00	
LST200-30SS	132	16.00	
LST200-50SS	132	16.00	
LST200-80SS	132	16.00	
LST200-B	133	1.95	
LST200-GV	133	0.04	
LST200-HBSS	133	0.35	
LST200-HSS	133	0.32	
LST204SS	133, 85	0.31	

Part Number	Pages	Weights	
LST206SS	133, 85	0.27	
LST208SS	133, 85	0.49	
LST2100SS	133, 85	0.45	
LST210SS	133, 85	0.48	
LST216SS	133, 85	0.27	
LST230SS	133, 85	0.49	
LST250SS	133, 85	0.49	
LST280SS	133, 85	0.48	
LST5100	129	0.05	
LST530	129	0.05	
LST550	129	0.05	
LST580	129	0.05	
LSTM050-100	128	0.76	
LSTM050-100C	128	0.76	
LSTM050-30	128	0.76	
LSTM050-30C	128	0.76	
LSTM050-50	128	0.30	
LSTM050-50C	128	0.76	
LSTM050-80	128	0.76	
LSTM050-80C	128	0.76	
LSTM050G	129	0.02	
LSTM075-100	128	0.76	
LSTM075-100C	128	0.76	
LSTM075-30	128	0.76	
LSTM075-30C	128	0.76	
LSTM075-50	128	0.76	
LSTM075-50C	128	0.76	
LSTM075-80	128	0.76	
LSTM075-80C	128	0.76	
LV025MTV	7	0.06	
LV025V	7	0.06	
LV038050MTV	130, 132, 134, 136, 7	0.06	
LV038MTV	7	0.07	
LV038V	7	0.07	
LV050100MTV	130, 132, 134, 136, 7	0.11	
LV050MTV	7	0.06	
LV050SLV	7	N/A	
LV050V	7	0.07	
LVHB025V	7	0.05	
LVHB038050MTV	130, 132, 134, 136, 7	0.07	
LVHB038V	7	0.06	
LVHB050V	7	0.07	
LVHB075100MTV	130, 132, 134, 136, 7	0.13	
LVHB075MTV	7	N/A	
LVHB075V	7	0.08	
LVPL025V	2, 7	#N/A	
LVPL038V	2, 7	#N/A	
LVPL050V	2, 7	#N/A	
M100050FPT	80	0.60	
M100075BRB	80	0.06	
M100075BRB90	81	0.06	
M100075FPT	80	0.05	
M100075MPT	80	0.05	
M100100HBT	81	0.09	
M100125BRB	80	0.08	
M100125BRB90	81	0.11	
M100125BRBSWP90	77	0.15	
M100125BRBSWPG90	77	0.15	
M100125HBT	81	N/A	
M100125MPT	80	0.11	
M100150BRB90	81	0.17	
M100A	80	0.07	
M100BRB	80	0.06	
M100BRB45	81	0.07	

Part Number	Pages	Weights	
M100BRB90	81	0.08	
M100BRBSWP90	77	0.15	
M100BRBSWPG90	77	0.15	
M100BSP	80	0.07	
M100CPG	79	0.09	
M100CPG45	79	0.09	
M100CPG90	79	0.14	
M100CR	81	0.24	
M100FPT	80	0.09	
M100G	81	0.02	
M100GV	81	0.02	
M100MPT	80	0.08	
M100MPTSS	80	0.34	
M100PA	78	0.25	
M100PAC	78	0.32	
M100PAT	78	0.65	
M100PLG	80	0.05	
M100PLG025	80	0.04	
M100PLG050	80	N/A	
M100SWFSS	78	0.35	
M100SWP90	77	0.13	
M100SWPG90	77	0.13	
M100TEE	79	0.20	
M101G	81	0.001	
M101GSA	78	0.07	
M101TEE	79	0.23	
M104SWFSS	78	0.70	
M12712	151, 153	N/A	
M13712	155, 159	N/A	
M15712	175, 177	N/A	
M17000	163	N/A	
M17002	163	N/A	
M18008	179	N/A	
M18012	179	N/A	
M19712X	187, 189	N/A	
M200100BRB	80	0.15	
M200100BRB90	81	0.16	
M200100CPG	79	0.16	
M200100TEE	79	0.52	
M200100TEEB	47, 79	0.70	
M200125BRB	80	0.16	
M200125BRB90	81	0.21	
M200125MPT	80	0.20	
M200125MPTSS	80	0.20	
M200150BRB	80	0.17	
M200150BRB45	81	N/A	
M200150BRB90	81	0.21	
M200150MPT	80	0.23	
M200150MPTSS	80	0.23	
M200A	80	0.24	
M200BRB	80	0.24	
M200BRB45	81	0.26	
M200BRB90	81	0.34	
M200BSP	80	0.26	
M200CPG	79	0.43	
M200CPG45	79	0.31	
M200CPG90	79	0.62	
M200CPG90SH	79	0.44	
M200CR	81	0.69	
M200FPT	80	0.29	
M200MPT	80	0.26	
M200MPTSS	80	0.81	
M200PLG	80	0.12	
M200PLG018	80	0.08	
M200PLG025	80	0.09	
M200PLG038	80	0.09	
M200PLG050	80	0.09	
M200PLG075	80	0.10	

Part Number	Pages	Weights	
M200PLG100	80	0.11	
M200SWFSS	78	0.70	
M200SWP90	77	0.38	
M200TEE	79	0.60	
M200YG45	79	N/A	
M201G	81	0.05	
M220100BRB	80	N/A	
M220100CPG	79	N/A	
M220100TEE	79	0.40	
M220125BRB	80	0.16	
M220150BRB	80	0.16	
M220150BRB90	81	0.21	
M220150MPTSS	80	0.65	
M220200CPG	79	0.19	
M220200HBT	81	0.40	
M220200SWP90	77	0.37	
M220200TEE	79	N/A	
M220250BRB	80	N/A	
M220375SWFSS	78	N/A	
M220A	80	0.20	
M220ASWP90	77	0.40	
M220BRB	80	0.19	
M220BRB45	81	0.22	
M220BRB90	81	0.30	
M220BRBSWP90	77	0.40	
M220BSP	80	0.20	
M220BWASS	79	0.50	
M220CPG	79	0.21	
M220CPG45	75, 79	0.24	
M220CPG6	75, 79	0.27	
M220CPG90	79	0.34	
M220CR	81	0.58	
M220CRSS	81	4.38	
M220D	80	0.40	
M220FPT	80	0.26	
M220MPT	80	0.21	
M220MPTSS	80	0.62	
M220MPTSWP90	77	0.30	
M220P6PRO	150	51.00	
M220P6PROE	150	#N/A	
M220P6PROW	152	47.40	
M220P6PROEW	152	#N/A	
M220PB	150	#N/A	
M220PBW	152	19.00	
M220PH5	150	N/A	
M220PH5E	150	N/A	
M220PH5EW	152	N/A	
M220PH5W	152	N/A	
M220PLG	80	0.12	
M220PLG038	80	#N/A	
M220PLG075	80	0.11	
M220PO	150	#N/A	
M220SWFSS	78	0.59	
M220SWP90	77	0.20	
M220SWP90SS	77	1.64	
M220TEE	79	0.52	
M220Y45	75, 79	1.32	
M220YG45	75, 79	1.34	
M221G	75, 81	0.03	
M221GSA	78	0.25	
M222PBIW	174	N/A	
M222PI6PROW	174	N/A	
M222PIE51W	174	N/A	
M222PIE5W	174	N/A	
M222PIH6W	174	N/A	
M222PIHYW	176	80.20	
M230P11PRO	150	N/A	
M230P6PRO	150	N/A	

Part Number	Pages	Weights	
M230PH6	150	54.00	
M300200CPG	79	0.25	
M300220BRB	80	0.27	
M300220BRB90	81	0.40	
M300220CPG	75, 79	0.24	
M300220MPTSS	80	1.25	
M300300HBT	81	1.03	
M300375SWFSS	78	N/A	
M300A	80	0.35	
M300ASWP90	77	0.80	
M300ASWPG90	77	0.85	
M300BRB	80	0.49	
M300BRB45	81	0.51	
M300BRB90	81	0.78	
M300BRBSWP90	77	1.24	
M300BSP	80	0.41	
M300CPG	79	0.41	
M300CPG45	75, 79	0.49	
M300CPG7	75, 79	0.57	
M300CPG90	79	0.75	
M300CR	81	1.18	
M300FPT	80	0.50	
M300MPT	80	0.44	
M300MPTSS	80	1.85	
M300MPTSWP90	77	0.63	
M300MPTSWPG90	77	0.68	
M300P11PRO	154	81.00	
M300P11PROW	158	N/A	
M300P6PRO	154	52.00	
M300PB	154	20.00	
M300PBW	158	N/A	
M300PH11W	158	N/A	
M300PH6	154	45.40	
M300PH6W	158	49.00	
M300PLG	80	0.25	
M300PLG075	80	0.23	
M300PLG100	80	0.20	
M300SWFSS	78	1.50	
M300SWP90	77	0.70	
M300SWPG90	77	0.75	
M300TEE	79	1.15	
M300Y45	75, 79	3.38	
M300YG45	75, 79	3.13	
M301G	75, 81	0.05	
M301GSA	78	0.50	
M303D	80	1.50	
M332PBIW	186	N/A	
M332PIE101W	186	N/A	
M332PIE10W	186	262.20	
M332PIH13W	186	155.00	
M332PIHYW	188	N/A	
M332POIW	186	N/A	
MBF100	86	0.90	
MBF100BD	86	1.00	
MBF100BDV	86	1.00	
MBF100V	86	1.00	
MBF150200BD	86	1.39	
MBF150200BDV	86	1.39	
MBF200	86	1.37	
MBF200BD	86	1.39	
MBF200BDV	86	1.39	
MBF200V	86	1.37	
MBF220	86	1.62	
MBF220BD	86	1.62	
MBF220BDV	86	1.62	
MBF220V	86	1.62	
MBF300	86	2.25	
MBF300BD	86	2.32	

Part Number	Pages	Weights	
MBF300BDV	86	2.40	
MBF300V	86	2.25	
MBP200	104	0.03	
MCV100	78	0.13	
MCV200	78	0.45	
MCV221	78	0.50	
MCV300	78	1.20	
MEV100BLCF	56	5.00	
MEV100BLXR1	57	1.75	
MEV100CF	50	4.57	
MEV100SLCF	54	5.00	
MEV100SLXR1	55	2.85	
MEV100XR1	51	N/A	
MEV10101	33, 41, 51, 55, 57	0.36	
MEV10102A	33, 41, 51, 55, 57	N/A	
MEV10151	33, 35, 41, 43, 51, 55, 57	N/A	
MEV10254A	33, 51	N/A	
MEV102CF	47	11.16	
MEV10354AB	41, 57	N/A	
MEV10354AS	41, 55	N/A	
MEV103CF	47	17.16	
MEV103MB	47	N/A	
MEV104CF	47	22.32	
MEV105CF	47	27.90	
MEV200BLCF	56	6.50	
MEV200BLXR1	57	N/A	
MEV200CF	50	5.75	
MEV200SLCF	54	6.50	
MEV200SLXR1	55	N/A	
MEV200XR1	51	N/A	
MEV20254A	35, 51	0.25	
MEV20354AB	43, 57	N/A	
MEV20354AS	43, 55	N/A	
MEV220BLCF	56	8.05	
MEV220BLXR1	57	N/A	
MEV220CF	50	7.00	
MEV220SLCF	54	8.13	
MEV220SLXR1	55	N/A	
MEV220XR1	51	N/A	
MEV25101	35, 37, 43, 45, 51, 55, 57	0.34	
MEV25102A	35, 37, 43, 45, 51, 55, 57	0.31	
MEV25151	37, 45, 51, 55, 57	N/A	
MEV25254A	37, 51	0.35	
MEV25354AB	45, 57	N/A	
MEV25354AS	45, 55	N/A	
MEV300CF	52	14.00	
MEVR100CF	50	4.45	
MEVR100SLCF	54	4.75	
MEVR200CF	50	6.48	
MEVR200SLCF	54	N/A	
MEVR220CF	50	8.06	
MEVR220SLCF	54	N/A	
MFM100	76	2.75	
MFM220	76	2.75	
MFM300	76	5.40	
MHV200	74	0.57	
MHV220A	74, 75	0.75	
MIS220	75	N/A	
MIS300	75	N/A	

Part Number	Pages	Weights	
MLEV100	48	0.65	
MLS100-20	82	0.82	
MLS100-40	82	1.00	
MLS100-50	82	0.87	
MLS100-80	82	0.88	
MLS100B	83	0.66	
MLS100BC	83	0.89	
MLS200-06	82	2.25	
MLS200-100	82	2.20	
MLS200-12	82	2.50	
MLS200-120	82	2.15	
MLS200-20	82	2.15	
MLS200-30	82	2.15	
MLS200-50	82	3.90	
MLS200-50M	82	2.40	
MLS200-80	82	2.15	
MLS200B	83	1.50	
MLS200BC	83	2.07	
MLS2100SS	85	0.54	
MLS220C1	85	0.82	
MLS220G1	85	0.02	
MLS220R1	85	0.45	
MLS222-04	84	3.82	
MLS222-06	84	3.82	
MLS222-08	84	3.82	
MLS222-10	84	3.50	
MLS222-100	84	3.70	
MLS222-16	84	3.70	
MLS222-30	84	3.75	
MLS222-50	84	3.75	
MLS222-80	84	3.70	
MLS222B	85	1.25	
MLS222BC	85	3.25	
MLS234G	101	N/A	
MLS234GV	101	N/A	
MLS250SS	85	0.60	
MLS280SS	85	0.57	
MLS300-04	84	8.44	
MLS300-08	84	8.00	
MLS300-12	84	8.00	
MLS300-20	84	8.00	
MLS300-50	84	8.44	
MLS300B	85	5.04	
MLS300B1	138	4.78	
MLS300CAP	138, 85	1.36	
MLS300ECG	138, 85	0.03	
MLS300ECGV	138, 85	0.04	
MLS300G	138, 85	0.03	
MLS300GV	138, 85	0.05	
MLST100-100	82	0.75	
MLST100-16	82	0.75	
MLST100-30	82	0.75	
MLST100-50	82	0.75	
MLST100-80	82	0.75	
MLST100-H	83	0.45	
MLST100-HB	83	0.63	
MLST150-100	82	2.00	
MLST150-16	82	2.00	
MLST150-30	82	2.00	
MLST150-50	82	2.00	
MLST150-80	82	2.00	
MLST150-H	83	1.15	
MLST150-HB	83	1.75	
MLV100V	7	0.13	
MPRV100-050	56	1.45	
MPRV100-075	56	1.45	
MPRV100-100	56	1.50	
MPRV100-125	56	1.53	

Part Number	Pages	Weights	
MPRV100-150	56	1.45	
MSUV100FP	26	0.50	
MSW220	78	0.38	
MTF220	86	N/A	
MTF220BD	86	0.75	
MTF300	86	2.15	
MTF300BD	86	2.10	
MV100BL	70	1.20	
MV100CF	58	0.75	
MV100SL	72	1.13	
MV10354B	71	N/A	
MV10354S	73	N/A	
MV200BL	70	2.00	
MV200CF	58	1.92	
MV200SL	72	2.00	
MV20354B	71	N/A	
MV20354S	73	N/A	
MV220BL	70	4.63	
MV220CF	58	3..25	
MV220SL	72	2.75	
MV225CF	60	7.30	
MV25254	63, 65	N/A	
MV25354B	71	N/A	
MV25354S	73	N/A	
MV300	58	3.90	
MV300BL	70	6.60	
MV300CF	58	6.00	
MV301CF	75	N/A	
MV30264	59	N/A	
MV35254BL	71	N/A	
MV35278	71	N/A	
MVE002	33, 35, 37, 41, 43, 45, 51, 55, 57	N/A	
MVE004	33, 35, 37, 41, 43, 45, 51, 55, 57	N/A	
MVE007	33, 35, 37, 41, 43, 45, 51, 55, 57	N/A	
MVE104	33, 35, 37, 41, 43, 45, 51, 55, 57	N/A	
MVE105	33, 41	N/A	
MVE106	33, 35, 37, 41, 43, 45, 51, 55, 57	N/A	
MVE107	35, 37, 43, 45, 51, 55, 57	N/A	
MVS220CF	62, 75	1.85	
MVS220FP	62	1.70	
MVS220HSFP	64	2.85	
MVS220SS	64	6.63	
MVS300CF	66	3.00	
MVS300CFFP	66	3.75	
MVS300HSFP	68	6.32	
MVS30254	67	N/A	
MVS35254	67, 69	N/A	
MVSF220FP	62	1.80	
MVSF220HSFP	64	2.00	
MVSF220SS	64	7.15	
MVSF300	66	3.25	
MVSF300FP	66	4.00	
MVSF300HSFP	68	6.69	
MVSMT220FP	62	1.75	
MVSMT220HSFP	64	2.90	
MVSMT220SS	64	7.34	

Part Number	Pages	Weights	
MVSMT300	66	3.00	
MVSMT300HSFP	68	6.73	
MVT220SL	72	2.69	
NIP025-SH	123	0.01	
NIP038-SH	123	0.01	
NIP050-3	123	0.04	
NIP050-SH	123	0.02	
NIP075-4	123	0.07	
NIP075-6	123	0.12	
NIP075-SH	123	0.03	
NIP100-4	123	0.09	
NIP100-6	123	0.15	
NIP100-SH	123	0.04	
NIP125-4	123	0.13	
NIP125-6	123	0.21	
NIP125-SH	123	0.06	
NIP150-3	123	0.15	
NIP150-4	123	0.22	
NIP150-5	123	0.26	
NIP150-6	123	0.34	
NIP150-SH	123	0.12	
NIP200-4	123	0.25	
NIP200-6	123	0.38	
NIP200-SH	123	0.14	
NIP2101	104	0.30	
NIP300-4	123	0.43	
NIP300-6	123	0.70	
NIP300-SH	123	0.30	
NIP400-SH	123	1.55	
PIP0716	61	N/A	
PLUG025	124	0.03	
PLUG038	124	0.03	
PLUG050	124	0.02	
PLUG075	124, 75	0.04	
PLUG075S	133	0.02	
PLUG100	124	0.06	
PLUG125	124	0.09	
PLUG150	124	0.10	
PLUG200	124	0.15	
PLUG300	124	0.44	
PV07256	27	0.20	
PV07257	27	0.07	
PV07257B	27	0.52	
PV075	27	0.53	
PV075V	27	0.57	
PV100	27	0.52	
PV100-075	27	0.64	
PV100-075B	27	0.63	
PV100-075BV	27	0.24	
PV100-075V	27	0.35	
PV100V	27	0.40	
PV10254	27	0.24	
PV10265	27	0.07	
PV10265V	27	0.20	
RB038-025	123	0.01	
RB050-018	123	N/A	
RB050-025	123	0.02	
RB050-038	123	0.01	
RB075-018	123	0.04	
RB075-025	123	0.04	
RB075-038	123	0.03	
RB075-050	123	0.03	
RB100-018	123	0.07	
RB100-025	123	0.07	
RB100-050	123	0.05	
RB100-075	123	0.04	
RB125-038	123	0.11	
RB125-075	123	0.09	

Part Number	Pages	Weights	
RB125-100	123	0.07	
RB150-075	123	0.12	
RB150-100	123	0.10	
RB150-125	123	0.10	
RB200-075	123	0.18	
RB200-100	123	0.17	
RB200-125	123	0.14	
RB200-150	123	0.12	
RB300-150	123	0.51	
RB300-200	123	0.50	
RB400-300	123	1.00	
RC100-075	123	0.15	
RC150-100	123	0.20	
RC150-125	123	0.20	
RC200-050	123	0.25	
RC200-100	123	0.26	
RC200-125	123	0.26	
RC200-150	123	0.26	
RC300-200	123	0.62	
RN050-038	123	0.02	
RN075-050	123	0.03	
RN100-050	123	0.04	
RN100-075	123	0.06	
RN125-075	123	0.08	
RN125-100	123	0.08	
RN150-100	123	0.12	
RN150-125	123	0.14	
RN200-125	123	0.17	
RN200-150	123	0.17	
RN300-200	123	0.36	
RS21	127	0.91	
RSTB	127	0.87	
RSTB-2	127	0.10	
SL025-90	125	0.03	
SL038-90	125	0.03	
SL050-90	125	0.06	
SL075-45	125	0.07	
SL075-90	125	0.08	
SL100-45	125	0.10	
SL100-90	125	0.13	
SL125-45	125	N/A	
SL125-90	125	N/A	
SL150-45	125	0.25	
SL150-90	125	0.25	
SL200-45	125	0.34	
SL200-90	125	0.41	
SL300-45	125	0.85	
SL300-90	125	1.05	
ST200	112	0.77	
ST300	112	1.27	
SUV050FP	26	N/A	
SUV075FP	26	N/A	
SUV100FP	26	0.40	
SUV125FP	26	0.88	
SUV150FP	26	0.88	
SUV200FP	26	1.45	
SW100	127	0.09	
SW150	127	0.20	
SW200	127	0.31	
SW220	127	0.50	
TA283	107	0.14	
TA283QD	107	0.14	
TC120	122	0.10	
TC130	122	0.10	
TC150	122	0.11	
TC162	122	0.12	
TC181	122	0.12	
TC193	122	0.12	

Part Number	Pages	Weights	
TC206	122	0.12	
TC218	122	0.13	
TC224	122	0.14	
TC231	122	0.15	
TC250	122	0.16	
TC287	122	0.17	
TC312	122	0.17	
TC331	122	0.17	
TC343	122	0.17	
TC425	122	0.18	
TC438	122	0.36	
TC456	122	0.37	
TEE025	124	0.04	
TEE038	124	0.05	
TEE050	124	0.10	
TEE075	124	0.14	
TEE100	124	0.21	
TEE125	124	0.32	
TEE150	124	0.45	
TEE200	124	0.60	
TEE300	124	1.58	
TEG075	124	0.20	
TEG100	124	0.21	
TF038SS	110	0.25	
TF050	110	0.25	
TF050SS	110	0.80	
TF050V	110	0.22	
TF073	110	0.07	
TF075	110	0.20	
TF075SS	110	1.15	
TF075V	110	0.22	
TF100	110	0.35	
TF100AV	111	0.32	
TF100SS	110	2.85	
TF100V	110	0.40	
TF103	110	0.09	
TF125	110	0.35	
TF125AV	111	0.68	
TF125SS	110	1.92	
TF125V	110	0.66	
TF138GV	110	N/A	
TF150	110	0.63	
TF150AV	111	0.68	
TF150SS	110	4.38	
TF150V	110	0.55	
TF153	110	N/A	
TF200	110	0.55	
TF200AV	111	0.60	
TF200BSP	110	N/A	
TF200SS	110	3.60	
TF200V	110	0.56	
TF220	110	0.82	
TF220G	110	0.03	
TF220GV	110	0.05	
TF220SS	110	5.27	
TF220V	110	0.82	
TF223	110	0.20	
TF300	110	2.00	
TF300BSP	110	N/A	
TF300G	110	0.07	
TF300GV	110	0.10	
TF300SS	110	7.90	
TF300V	110	2.00	
TF303	110	N/A	
TF400	110	4.50	
TF400G	110	N/A	
TF400GV	110	0.70	
TF400V	110	N/A	

Part Number	Pages	Weights	
TF403	110	N/A	
TL101	112	1.70	
TL600	106	0.45	
TL600C	106	0.50	
TL650E	106	0.50	
TL650S	106	0.50	
TL651E	106	0.57	
TL651S	106	0.70	
TL652E	106	0.50	
TL652EPA	106	0.65	
TL652S	106	0.63	
TL6531	106	0.07	
TLA10	112	2.58	
TLV1	112	0.04	
TLV10R	112	1.50	
TLV2	112	0.02	
TLVA10	112	2.25	
TM075/050	127	0.28	
TR10	112	0.92	
TR10R1	112	0.81	
UB100	79	0.25	
UB202	79	0.26	
UB220	79	0.32	
UV050FP	26	0.25	
UV075FP	26	0.25	
UV100FP	26	0.40	
UV10150	25	0.04	
UV10151	25	0.01	
UV10153	25	0.01	
UV10163	25	0.01	
UV10254	25	0.16	
UV10255	25	0.02	
UV10256	25	0.02	
UV10258	25	0.01	
UV10264	25	0.01	
UV10264V	129	0.02	
UV125FP	26	1.00	
UV150FP	26	N/A	
UV15163	131, 135, 145, 153, 159, 161, 163, 165, 167, 169, 175, 177, 179, 181, 183, 187, 189, 193, 195, 197, 199, 201, 83	0.01	
UV15163V	131, 135	0.01	
UV200FP	26	N/A	
UV204FPFD	104	1.50	
UVA100FP	24	0.54	
V050	8	0.75	
V05256	9	0.13	
V07017	25, 9	N/A	
V07018	145, 153, 159, 25, 9	N/A	
V07019	145, 153, 159, 25, 9	0.03	
V07021A	25, 59, 71, 73, 9	0.01	
V07060	25, 9	0.01	
V07151A	25, 9	0.02	
V07155	25, 9	0.04	
V07159	25, 9	0.01	
V07163	25, 9	0.01	

Part Number	Pages	Weights	
V07200	25, 9	0.07	
V07254	25, 9	0.13	
V07256	25, 9	0.07	
V07257	9	0.07	
V07258A	25, 9	0.02	
V07264	25, 9	0.01	
V07354B	23	N/A	
V07354S	23	0.33	
V07357	23	N/A	
V075	8	0.75	
V075BL	22	1.35	
V075SL	22	1.35	
V100	8	0.70	
V10020A	25, 59, 71, 73, 9	0.02	
V10060	23, 59, 71, 73, 9	0.01	
V100BL	22	1.25	
V100FP	8	1.16	
V100SL	22	1.31	
V10117	175, 189, 33, 41, 51, 55, 57, 59, 71, 73, 9	N/A	
V10118	161, 163, 165, 167, 169, 175, 177, 187, 189, 193, 195, 197, 33, 39, 41, 51, 53, 55, 57, 59, 61, 71, 73, 9	0.01	
V10119	161, 163, 165, 167, 169, 187, 193, 195, 197, 33, 39, 41, 51, 53, 55, 57, 59, 61, 71, 73, 9	N/A	
V10151A	23, 59, 71, 73, 9	N/A	
V10153138	8	0.14	
V10153138BL	8	0.14	
V10153A	23, 25, 59, 9	0.06	
V10155	59, 9	0.07	
V10159	23, 59, 71, 73, 9	0.01	
V10161	25	0.18	
V10163	23, 59, 71, 73, 9	0.01	
V10200	59, 9	0.12	
V10254	59, 9	0.16	
V10256	9	0.19	
V10257	23, 9	0.22	
V10258	23	0.03	
V10258A	59, 9	0.04	
V10264	191, 23, 59, 9	0.02	
V10270	8, 9	0.10	
V10271	8, 9	0.13	
V10278	59	0.25	
V10353TB	23, 71	0.09	
V10353TS	23, 73	0.07	
V10354B	23	0.25	
V10354S	23	0.25	

Part Number	Pages	Weights	
V10355B	23, 71	0.07	
V10355S	23, 73	0.06	
V125	8	1.25	
V125BL	22	2.25	
V125FP	8	1.91	
V125SL	22	2.07	
V150	8	1.87	
V150BL	22	2.00	
V150SL	22	2.00	
V200	8	1.88	
V20010	13	N/A	
V20010SS	15, 17, 19, 21, 63, 65, 67, 69, 89, 91, 93	0.07	
V20011SS	185, 191	0.04	
V20017	25, 35, 43, 51, 55, 57, 59, 71, 73, 9	0.13	
V20018	11, 13, 15, 167, 169, 17, 177, 179, 181, 183, 185, 19, 191, 195, 197, 199, 201, 21, 25, 35, 37, 39, 43, 45, 51, 53, 55, 57, 59, 63, 65, 67, 69, 71, 73, 89, 9, 91, 93	0.02	
V20019	11, 13, 15, 17, 179, 181, 183, 19, 199, 201, 21, 25, 35, 37, 39, 43, 45, 51, 53, 55, 57, 59, 63, 65, 67, 69, 71, 73, 89, 9, 91, 93	0.01	
V20020	15, 17, 25, 59, 63, 71, 73, 89, 9, 91	0.02	
V20021	15, 17, 25, 59, 63, 71, 73, 89, 9, 91	0.02	
V20060	15, 17, 23, 25, 59, 63, 65, 71, 73, 89, 9, 91	0.01	
V200BL	22	2.80	
V200FP	10	3.25	
V200SL	22	2.75	
V20151M	23, 25, 59, 71, 73, 9	0.07	
V20152	25	0.14	
V20153	23, 59, 9	0.20	
V20153138	8	0.22	
V20153138BL	8	0.23	
V20153SH	73	0.20	
V20159	23, 25, 59, 71, 73, 9	0.02	
V20163	23, 25, 59, 71, 73, 9	0.01	

Part Number	Pages	Weights	
V20166	25	0.27	
V20200	25, 59, 9	0.22	
V20207	107, 118, 95, 97, 99	0.06	
V20207A	89, 91	0.02	
V20254	25, 59, 9	0.23	
V20255A	25, 59, 9	0.16	
V20256	25, 9	0.25	
V20257	23, 25, 9	0.25	
V20257B	89	N/A	
V20258	97, 99	0.05	
V20258A	25, 59, 89, 9, 91	0.04	
V20261	25	0.70	
V20262	25	0.75	
V20264	23, 25, 59, 9	0.02	
V20267	23, 9	0.30	
V20291	91	N/A	
V20294	59, 91	0.32	
V20344B	23	0.40	
V20344S	23	N/A	
V20353C	71, 73, 89, 9, 91	0.03	
V20353T	9	0.20	
V20353TB	23, 71	0.07	
V20353TS	23	N/A	
V20354B	23	N/A	
V20354S	23	0.32	
V20355B	23, 71	0.20	
V20355S	23, 73	0.10	
V20394	71, 73	N/A	
V204FP	12	2.71	
V21204	15, 63, 89, 91	0.02	
V21204V	89, 91	0.02	
V25017	11, 13, 25, 37, 45, 51, 55, 57, 71, 73	0.13	
V25020	11, 13, 19, 21, 25, 59, 61, 67, 71, 73, 93	0.03	
V25060	11, 13, 21, 23, 25, 39, 53, 59, 61, 69, 71, 73, 93	0.01	
V25121	11, 13, 19, 21, 25, 59, 61, 67, 71, 73, 93	0.03	
V25151B	11, 13, 23, 25, 59, 61, 71, 73	0.07	
V25152	25	0.28	
V25153	11, 13, 19, 21, 59, 67	0.28	
V25153138	8	0.16	
V25153138BL	8	0.16	
V25153SH	11, 13, 23, 73	N/A	
V25160	11, 13, 19, 21, 23, 25, 39, 53, 59, 61, 67, 69, 71, 73	0.02	

Part Number	Pages	Weights	
V25163	11, 13, 19, 21, 23, 25, 39, 53, 59, 61, 67, 69, 71, 73	N/A	
V25165	25	0.34	
V25200	11, 25, 59	0.43	
V25214V	17, 63, 65	0.02	
V25245	13	N/A	
V25254	11, 13, 25, 59	0.35	
V25255A	11, 13, 25, 59	0.25	
V25256	11, 25	0.45	
V25258	23, 71, 73	0.03	
V25258A	11, 13, 25, 59	0.05	
V25261	25	0.95	
V25264	11, 13, 23, 25, 37, 45, 51, 55, 57, 59, 71, 73	0.02	
V25270	10, 11, 8	0.25	
V25271	10, 11, 8	0.40	
V25353B	23, 71	0.25	
V25353TB	23, 71	0.13	
V25353TS	23, 73	0.20	
V25354B	23	N/A	
V25354S	23	0.50	
V25355B	23, 71	0.32	
V25355S	23, 73	0.38	
V25356	23	0.35	
V25378	71, 73	N/A	
V25456	13	0.45	
V25478	59	N/A	
V25502	61, 93	N/A	
V25503	61	N/A	
V25508	61	N/A	
V25553AX	61	N/A	
V25554AX	61	N/A	
V25555	61	N/A	
V25558D	61	N/A	
V25578AX	61	N/A	
V300	10	3.75	
V30017	11, 59	0.23	
V300FP	10	5.33	
V30151	11	N/A	
V30151B	67	N/A	
V30200	11, 59	0.59	
V30254	11, 59	0.59	
V30255	11, 59	0.48	
V30258A	11, 59	0.01	
V30264	11	0.62	
V30265	11, 19, 59, 67	0.01	
V35017	11, 39, 53, 59	0.63	
V35018	39, 53, 71	N/A	
V35200	11, 59	1.42	
V35254	11, 39, 53, 59	1.42	
V35255A	11, 21, 39, 59, 67, 93	0.80	
V35255ASS	21, 53, 69	N/A	
V35255BL	71	N/A	
V35258A	11, 59, 71, 93	0.07	
V35264	11, 39, 93	2.58	

Part Number	Pages	Weights	
V35264BL	71	N/A	
V35265	11, 21, 39, 53, 59, 67, 69, 93	0.02	
V35278	53, 59	1.00	
V400	10	8.50	
V40017	11	N/A	
V40200	11	4.20	
V40254	11	2.00	
V40255	11	1.80	
V40264	11	1.20	
V40265	11	0.03	
VA100	24	0.80	
VA150	24	2.58	
VA200	24	0.25	
VA200/150	24	N/A	
VA200FP	24	3.83	
VC200	111	0.17	
VC230	111	0.26	
VC300	111	0.68	
VC330	111	0.68	
VE07357A	33, 41	N/A	
VE10155SSH	33, 51	0.20	
VE10256A	33, 41	N/A	
VE10257A	33, 41	N/A	
VE10258A	33, 41, 51, 55, 57, 71, 73	0.05	
VE10264	33, 41, 51, 55, 57, 71, 73	0.02	
VE10278A	51, 55, 57, 71, 73	N/A	
VE10355	41, 55, 57	N/A	
VE107B	33, 35, 37, 41, 43, 45, 51, 55, 57	0.02	
VE109E	33, 35, 37, 41, 43, 45, 51, 55, 57	N/A	
VE15220	33, 35, 37, 41, 43, 45, 51, 55, 57	N/A	
VE20255SSH	35, 51	N/A	
VE20256A	35, 43	N/A	
VE20257A	35, 43	N/A	
VE20258A	23, 35, 43, 51, 55, 57, 71, 73, 97, 99	0.05	
VE20264	35, 43, 51, 55, 57, 71, 73	0.02	
VE20294A	51, 55, 57	N/A	
VE20355	43, 55, 57	N/A	
VE25255SSH	37, 51	N/A	
VE25258A	37, 45, 51, 55, 57	N/A	
VE25355	45, 55, 57	N/A	
VE25356A	37, 45	N/A	
VE25378A	51, 55, 57	N/A	
VE30022	39, 53	N/A	
VE30121	39, 53	N/A	
VE30151SS	39, 53	N/A	
VE35188	39, 53	N/A	
VE35189	39, 53	N/A	
VE35258A	39, 53	N/A	
VE4983	33, 51, 55	N/A	

Part Number	Pages	Weights	
VE4984	33, 41, 51, 55, 57	N/A	
VE4987	35, 37, 43, 45, 51, 55, 57	N/A	
VE4988	35, 37, 51, 55	N/A	
VE5630	39, 51, 53	N/A	
VF20254	15, 63	N/A	
VF25254	17, 63, 65	N/A	
VF25256	11, 13	0.57	
VF25356	13	0.50	
VFB201	105	2.38	
VFMT200FP	10	2.90	
VFMT200FPSH	10	3.17	
VFMT204FP	12	3.33	
VFT25254	17, 63	N/A	
VL20153	8	0.35	
VL25153	10	0.41	
VMT20254	15, 63	N/A	
VMT25256	11, 13	0.50	
VMT25356	13	N/A	
VN100	24	0.72	
VN10200	25	0.06	
VN10253	25	N/A	
VN10254	25	N/A	
VN10263	25	N/A	
VN10264	25	N/A	
VN10265	25	N/A	
VN10269	25	N/A	
VN10270	25	N/A	
VN10271	25	N/A	
VN10273	25	N/A	
VN10274	25	N/A	
VRH200K	8	0.17	
VRH220K	10	0.18	
VS20021	17, 65	N/A	
VS20101SS	17, 65	N/A	
VS20102SS	17, 65	N/A	
VS20151	15, 17, 63, 89, 91	0.04	
VS20151SS	17, 65	N/A	
VS20152SH	15, 63	0.08	
VS20163	17, 65	N/A	
VS20200	105, 15, 63	1.29	
VS20209	104	N/A	
VS20255	15, 63	0.20	
VS20256	15	0.25	
VS20258A	15, 63	0.02	
VS20294	63	N/A	
VS204FP	16	1.73	
VS25151B	13, 19, 21, 67	N/A	
VS25151C	93	N/A	
VS25153	17, 63	0.20	
VS25153SS	17, 65	N/A	
VS25255	17, 63	N/A	
VS25255SS	17, 65	N/A	
VS25258AR1	17, 63, 65	N/A	
VS25356	17	N/A	
VS25378	63, 65	N/A	
VS30021	21, 69	N/A	
VS30101SS	21, 69	N/A	
VS30102SS	21, 69	N/A	
VS30151SS	21, 69	N/A	
VS30153SS	21, 69	N/A	
VS30254	19	N/A	
VS30255	19, 67	N/A	

Part Number	Pages	Weights	
VS30258	19, 67	N/A	
VS30278	67	N/A	
VS35258	21, 67, 69	N/A	
VS35278	67, 69	N/A	
VSF200	14	1.25	
VSF200CF	62	1.50	
VSF200FPAF	12	3.05	
VSF202MR	104	1.70	
VSF204FP	16	1.75	
VSF300	18	3.50	
VSF30264	19, 67	N/A	
VSF35254	21, 67, 69	N/A	
VSFB201	105	1.75	
VSFHB200	14	1.45	
VSFMT200	105, 14	1.45	
VSFMT204FP	16	1.85	
VSFMT204HSFP	16	2.00	
VSFMT220SS	64	N/A	
VSFMT300	18	3.00	
VSFMT300FP	20	4.29	
VSFMT300HSFP	20	6.63	
VSFTF202A	105	2.00	
VSHB20256	15	N/A	
VSMT200	14	1.35	
VSMT200CF	62	1.45	
VSMT200FPAF	12	3.00	
VSMT20256	15	N/A	
VSMT202MR	104	N/A	
VSMT204FP	16	1.85	
VSMT25356	17, 63, 65	N/A	
VSMT300	18	3.27	
VSMT30254	19	N/A	
VSMT30264	19, 67	N/A	
VSMT35256	21, 69	N/A	
VSS025	28	0.64	
VSS02500	28	N/A	
VSS038	28	0.59	
VSS050	28	0.71	
VSS05153	28	0.07	
VSS05200	28	N/A	
VSS07153	28	0.13	
VSS07200	28	N/A	
VSS075	28	1.30	
VSS100	28	2.18	
VSS10020	95	0.01	
VSS10021	95	N/A	
VSS10060	95	N/A	
VSS10153	28	0.23	
VSS10159	95	0.01	
VSS10160F	95	N/A	
VSS10160M	95	N/A	
VSS10200	28	N/A	
VSS10204	95	N/A	
VSS10255	95	N/A	
VSS10258	95	N/A	
VSS125	28	3.11	
VSS12500	28	N/A	
VSS150	28	3.97	
VSS15020	101, 17, 65, 97, 99	N/A	
VSS15021	101, 97, 99	N/A	
VSS15060	101, 97, 99	N/A	
VSS15153	28	0.32	
VSS15159	101, 97, 99	N/A	
VSS15160	101, 97, 99	N/A	
VSS15200	28	N/A	
VSS200	28	6.91	
VSS20153	28	0.32	

Part Number	Pages	Weights	
VSS25200	28	N/A	
VSS300	28	22.60	
VSS30020	21, 69	N/A	
VSS35153	28	1.09	
VSS35200	28	N/A	
VT100SL	22	N/A	
VT200BL	22	2.70	
VT200SL	22	N/A	
VTF200GT	105	0.04	
W230233	102	1.07	
W230234	102	1.10	
W230235	102	1.07	
W230236	102	1.13	
W230237	102	1.07	
W230238	102	1.17	
W230239	102	1.07	
W230240	102	1.10	
WSF210	103	1.20	
WSF210FSA	103	1.20	
WSF210FSAV	103	N/A	
WSF210V	103	N/A	
WSF223MR	103	1.00	
WSF223MRV	103	1.00	
WSFMT200	26	N/A	
WSFMT200FP	26	1.40	
WSMT210	103	1.20	
WSMT210FSA	103	1.07	
WSMT210FSAV	103	N/A	
WSMT223MR	103	1.00	
WSMT223MRV	103	1.00	

Part weight charts are estimates only and are calculated per piece and without skids or boxes. Actual shipping charges can only be calculated once the order has been processed and is ready for shipment.

0.25 = ¼ lb 0.50 = ½ lb
0.75 = ¾ lb 1.00 = 1 lb

BRITISH PIPE THREAD		
PART NO	DESCRIPTION	PAGE NO.
DM100ABSS	1" Stainless Steel Male Dry Mate with British Standard Pipe Thread & All PTFE Seals	94
DM100DBSS	1" Stainless Steel Female Dry Mate with British Standard Pipe Thread & FKM (viton type) Face Seal	94
DM100DBSSE	1" Stainless Steel Female Dry Mate with British Standard Pipe Thread & EPDM Face Seal	94
DM100DBSST	1" Stainless Steel Female Dry Mate with British Standard Pipe Thread & Kalrez Face Seal	94
DM150AB	1½" Poly Male Dry Mate with British Standard Pipe Thread & FKM(viton type) Face Seal	88
DM150ABSS	1½" Stainless Steel Male Dry Mate with British Standard Pipe Thread & All PTFE Seals	96
DM150DB	1½" Poly Female Dry Mate with British Standard Pipe Thread	88
DM150DBSS	1½" Stainless Steel Female Dry Mate with British Standard Pipe Thread & FKM (viton type) Face Seal	96
DM150DBSSE	1½" Stainless Steel Female Dry Mate with British Standard Pipe Thread & EPDM Face Seal	96
DM150DBSST	1½" Stainless Steel Female Dry Mate with British Standard Pipe Thread & Kalrez Face Seal	96
DM200AB	2" Poly Male Dry Mate with British Standard Pipe Threads & FKM (viton type) Face Seal	90
DM200ABSS	2" Stainless Steel Male Dry Mate with British Standard Pipe Thread	98
DM200DB	2" Poly Female Dry Mate with British Standard Pipe Threads & FKM (viton type) Face Seal	98
DM200DBSS	2" Stainless Steel Female Dry Mate with British Standard Pipe Thread & FKM (viton type) Face Seal	98
DM200DBSSE	2" Stainless Steel Female Dry Mate with British Standard Pipe Thread & EPDM Face Seal	98
DM200DBSST	2" Stainless Steel Female Dry Mate with British Standard Pipe Thread & Kalrez Face Seal	98
DM220ABSS	2" Male x BSP Threads w/PTFE Seals	100
DM220DBSS	2" FP Female x BSP Threads	100
DM220DBSSE	2" FP Female x BSP Threads w/EPDM Seals	100
DM220DBSSTS	2" FP Female x BSP Threads w/ TFE Encap O-Ringw/ TFE Encap O-Ring	100
M100BSP	1" Manifold Flange x 1" Male British Standard Pipe Thread	80
M200BSP	2" Manifold Flange x 2" Male British Standard Pipe Thread	80
M220BSP	2" Full Port Manifold Flange x 2" Male British Standard Pipe Thread	80
M300BSP	3" Full Port Manifold Flange x 3" Male British Standard Pipe Thread	80
NIP2101	2" NPT x British Standard Pipe Thread-White	104
TF200BSP	2" Poly Bulkhead British Standard Pipe Thread Tank Fitting	110
TF300BSP	3" Poly Bulkhead British Standard Pipe Thread Tank Fitting	110

Banjo Liquid Handling Products

2016

Catalog #37

Banjo Corporation
150 Banjo Drive
Crawfordsville, Indiana 47933 USA
ph: 765-362-7367
fax: 800-458-0232 or 765-362-0744
banjoorders@idexcorp.com
banjosales@idexcorp.com
www.banjocorp.com

#YellowHandle